HEIDENHAIN

Product Information

ECI 1119
EQI 1131

Absolute Rotary Encoders without Integral Bearing

With additional measures: suitable for safety-related applications with up to SIL 3

For HMC 2 connection technology

01/2023

ECI 1119, EQI 1131

Rotary encoders for absolute position values with safe singleturn information
- **Robust inductive scanning principle**
- **Mounting-compatible with photoelectric rotary encoders with a 75A stator coupling**
- **70C mounting flange**
- **Blind hollow shaft (Ø 6 mm) for axial clamping without a positive-locking element (82A) or with a positive-locking element (1KA)**
- **Required mating dimensions with a M3x25 central screw and cost optimization for the customer side upon request**

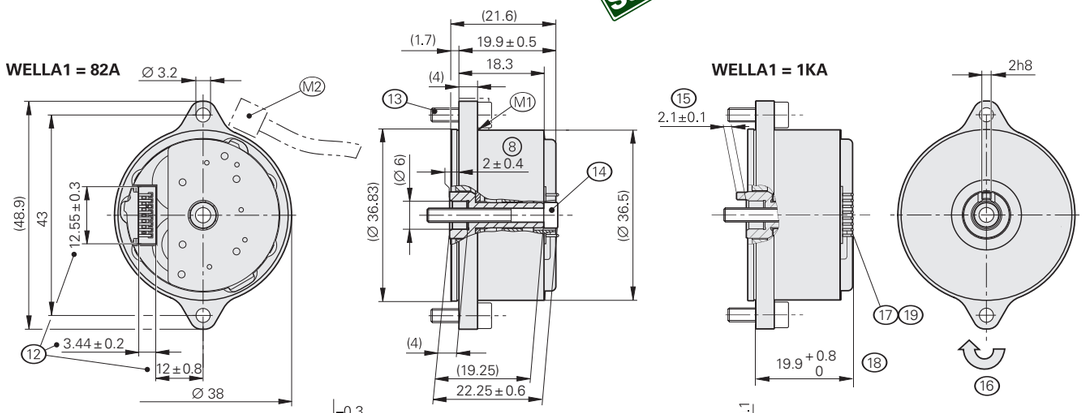

Required mating dimensions

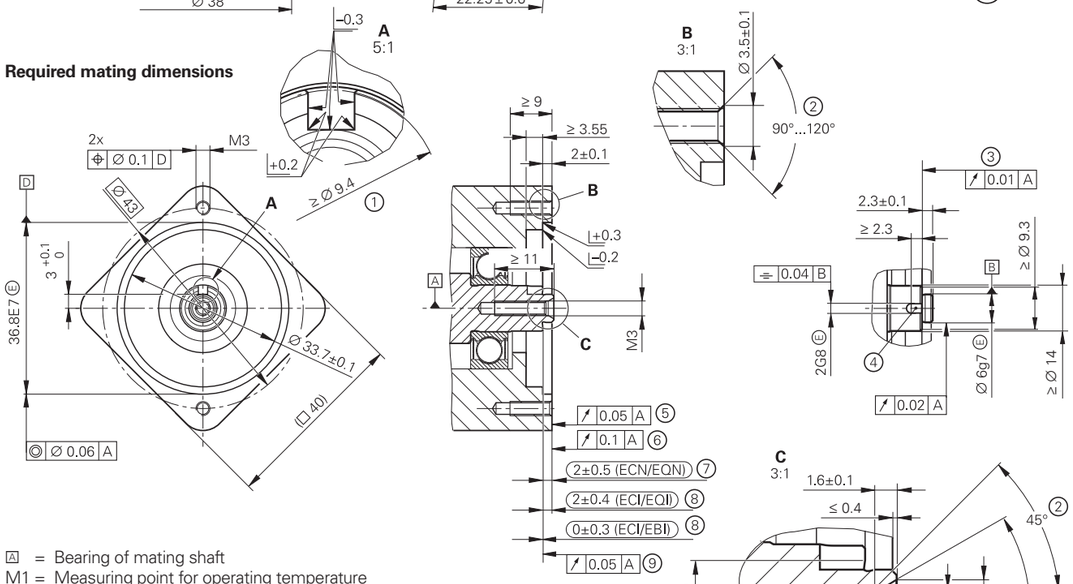

A = Bearing of mating shaft
M1 = Measuring point for operating temperature
M2 = Measuring point for vibration
1 = Contact surface of slot
2 = Chamfer at start of thread is mandatory for material bonding anti-rotation lock
3 = Shaft surface; ensure full-surface contact!
4 = Slot required only for ECN/EQN and ECI/EQI with WELLA1 = 1KA
5 = ECI/EQI flange surface: ensure full-surface contact!
6 = ECN/EQN coupling surface
7 = Maximum permissible deviation between the shaft surface and coupling surface; compensation of mounting tolerances and thermal expansion, of which ±0.15 mm of dynamic axial motion is permitted (ECN/EQN)
8 = Mounting dimension: maximum permissible deviation between the shaft surface and flange surface; compensation of mounting tolerances and thermal expansion; dynamic motion permitted over entire range (ECI/EBI/EQI)
9 = ECI/EBI flange surface; ensure full-surface contact!
10 = Undercut
11 = Possible centering hole
12 = Distance to cover; note the opening for header, header connector, and wires
13 = Screw: ISO 4762 – M3x10 – 8.8 – MKL; tightening torque: 1 Nm ±0.1 Nm
14 = Screw: ISO 4762 – M3x25 – 8.8 – MKL; tightening torque: 1 Nm ±0.1 Nm
15 = Positive-locking element; ensure correct engagement in the slot (e.g., by measuring the device overhang)
16 = Direction of shaft rotation for ascending position values
17 = 15-pin header
18 = Dimension for JH standard cable

mm
Tolerancing ISO 8015
ISO 2768 - m H
≤ 6 mm: ±0.2 mm

Specifications	ECI 1119 singleturn	EQI 1131 multiturn
Functional safety for applications with up to	As a single-encoder system for monitoring and closed-loop functions: • SIL 2 as per EN 61508 (further basis for testing: EN 61800-5-2) • Category 3, PL d as per EN ISO 13849-1:2015 With additional measures as per Document 1277016, suitable for safety-related applications with up to SIL 3 or Category 4, PL e Safe in the singleturn range	
PFH[1]	*SIL 2:* ≤ $15 \cdot 10^{-9}$ (probability of dangerous failure per hour) *SIL 3:* ≤ $2 \cdot 10^{-9}$	
Safe position[2]	*Encoder:* ±0.88° (safety-related measuring step SM = 0.35°) *Mechanical coupling for 82A shaft:* ±0°; *for 1KA shaft:* ±2°; (fault exclusion for loosening of the shaft coupling and stator coupling; designed for accelerations at the stator: ≤ 400 m/s², and the rotor: ≤ 600 m/s²)	
Interface	EnDat 3	
Ordering designation	E30–R2	
Position values per revolution	524288 (19 bits)	
Revolutions	–	4096 (12 bits)
XEL.time HPFout data rate	≤ 11 µs at 12.5 Mbit/s ≤ 8.2 µs at 25 Mbit/s	
System accuracy	±120″	
Electrical connection	15-pin PCB connector (with connection for external temperature sensor)[3]	
Cable length	At 12.5 Mbit/s: ≤ 100 m; at 25 Mbit/s: ≤ 40 m	
Supply voltage	DC 4 V to 14 V	
Current consumption (typical)	*At 12 V:* 45 mA (without communication)	*At 12 V:* 50 mA (without communication)
Power consumption[4] (maximum)	*At 4 V:* ≤ 850 mW; *at 14 V:* ≤ 900 mW	*At 4 V:* ≤ 950 mW; *at 14 V:* ≤ 1000 mW
Shaft	Blind hollow shaft for axial clamping (Ø 6 mm) without positive-locking element (82A) or with positive-locking element (1KA)	
Shaft speed	≤ 15000 rpm	≤ 12000 rpm
Moment of inertia of rotor	$0.2 \cdot 10^{-6}$ kgm²	
Angular acceleration of rotor	≤ $1 \cdot 10^{5}$ rad/s²	
Axial motion of measured shaft	≤ ±0.4 mm	
Vibration 55 Hz to 2000 Hz[5] **Shock** 6 ms	*Stator:* ≤ 400 m/s²; *rotor:* ≤ 600 m/s² (EN 60068-2-6) ≤ 2000 m/s² (EN 60068-2-27)	
Operating temperature	–40 °C to 110 °C	
Trigger threshold for exceeded temperature error message	125 °C (measuring accuracy of internal temperature sensor: ±1 K)	
Relative humidity	≤ 93 % (40 °C/21 d as per EN 60068-2-78), without condensation	
Protection EN 60529	IP00	
Mass	≈ 0.04 kg	
ID number	1259551-01/-51[6] (shaft: 1KA) 1259551-02/-52[6] (shaft: 82A)	1259552-01/-51[6] (shaft: 1KA) 1259552-02/-52[6] (shaft: 82A))

[1] For use at ≤ 2000 m above sea level
[2] Further tolerances may arise in subsequent electronics after position value comparison (contact mfr. of subsequent electronics)
[3] See *Temperature measurement in motors* in the *Encoders for Servo Drives* brochure
[4] See *General electrical information* in the *Interfaces of HEIDENHAIN Encoders* brochure or at *www.heidenhain.de*
[5] 10 Hz to 55 Hz, 4.9 mm constant peak to peak
[6] Rotary encoders in a collective package

Mounting

The blind hollow shaft of the rotary encoder is seated onto the measured shaft and fastened with a central screw. It is particularly important to ensure that the positive-locking element of the 1KA rotary encoder shaft securely engages the corresponding slot in the measured shaft. The stator is positioned for mounting via a centering diameter and fastened with two mounting screws. Use screws with material bonding anti-rotation lock (see *Mounting accessories*).

Further information:

For the customer-side mounting design, aluminum and steel are permissible materials for the customer-side shaft and stator.

In addition, comply with the material specifications and other material characteristics in the *Encoders for Servo Drives* brochure (ID 208922-xx).

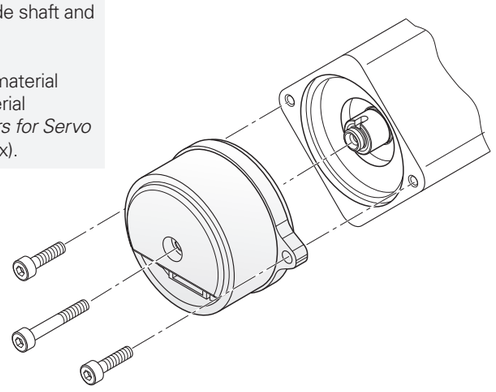

Integrated temperature evaluation

This rotary encoder features a temperature sensor integrated into the encoder electronics and an evaluation circuit for an external temperature sensor. In both cases, the respective digitized temperature value is transmitted purely serially via the EnDat protocol. Please bear in mind that neither the temperature measurement nor the transmission of the temperature value is safe in terms of functional safety. With regard to the internal temperature sensor (FID 0x21 SENSOR_TEMP_INT), the rotary encoder supports the two-stage cascaded signaling of a temperature exceedance. It consists of an EnDat warning and an EnDat error message. In compliance with the EnDat specification, when the temperature reaches the warning threshold for temperature exceedance of the internal temperature sensor, an EnDat warning is issued (HPF.STATUS.W "collective warning bit"). In addition, bit 26 (W10) "Temperature warning threshold exceeded" is set in the LPF with the FID=ERRMSG. This warning threshold for the internal temperature sensor is stored in the parameter SET.tempWarnLevel and can be individually adjusted. A device-specific default value is saved here before shipping. The temperature measured by the internal temperature sensor is higher by a device-specific and application-specific amount than the temperature at measuring point M1, as shown in the dimension drawing.

The encoder features a further, albeit non-adjustable trigger threshold for the EnDat error message (HPF.STATUS.F "collective error bit"). In addition, bit 8 (A8) "Permissible ambient conditions exceeded" is set in the LPF with the FID=ERRMSG. This trigger threshold may vary depending on the encoder model and is stated in the specifications. HEIDENHAIN recommends adjusting the warning threshold based on the application such that this threshold is sufficiently below the trigger threshold for the "Temperature exceeded" EnDat error message. Fulfillment of the encoder's intended use requires adherence to the operating temperature at measuring point M1.

Mounting accessories

Screws
Screws (central screw, mounting screws) are not included in delivery.
They can be ordered separately.

ECN 1119/EQN 1131	Screws[1]		Quantity
Central screw for shaft fastening	ISO 4762-**M3×25**-8.8-**MKL**	ID 202264-86	10 or 100
Fastening screw for flange	ISO 4762-**M3×10**-8.8-**MKL**	ID 202264-87	20 or 200

[1] With coating for material bonding anti-rotation lock

Please note the information on screws from HEIDENHAIN in the *Encoders for Servo Drives* brochure, under *Screws with material bonding anti-rotation lock* in the chapter *General mechanical information*.

Mounting aid
To avoid damage to the cable, use the mounting aid to connect and disconnect the cable assembly. Apply pulling force only to the connector of the cable assembly and not to the wires.

ID 1075573-01

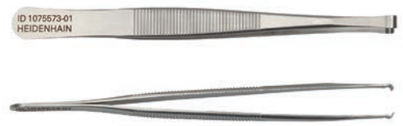

Mounting aid
For turning the encoder shaft from the rear. This facilitates finding the positive-locking connection between the encoder and the measured shaft.

ID 821017-03

EnDat 3 adapter
Adapter for connecting an encoder with EnDat 3 (E30-R2) to the PWM 21

ID 1317260-01

For further mounting information and mounting aids, please refer to the relevant mounting instructions and the *Encoders for Servo Drives* brochure. The mounting arrangement can be checked with the PWM 21 and ATS software. For selection of the software, please contact HEIDENHAIN.

Electrical connection

Cables

ETFE encoder cable inside the motor ∅ 1.8 mm 2 x 0.15 mm^2, without shield and with ETFE wires ∅ 2.2 mm 2 x 0.15 mm^2 for a temperature sensor; A_P = 0.15 mm^2		
15-pin PCB connector (female) and unassembled cable end, with two twisted ETFE single wires (communication) and two ETFE single wires (length: 0.10 m) with heat shrink tubing (temperature sensor)		1302347-xx
15-pin PCB connector (female) and 8-pin M12 SpeedTEC angle flange socket (male), with two twisted ETFE single wires (communication) and two ETFE single wires (length: 0.10 m) with heat shrink tubing and a 2-pin connector (male) for a temperature sensor		1279930-xx

PUR adapter cable ∅ 9.3 mm with external shield; 4 x 0.5 mm^2 (power wires) 2 x 0.34 mm^2 (brake wires, shielded) 2 x 0.14 mm^2 (communication wires, shielded); A_P = 0.14 mm^2		
8-pin M12 SpeedTEC straight connector (female), 3-pin header connector (power), 4-pin header (brake wires), and 15-pin D-sub connector (male) (communication)	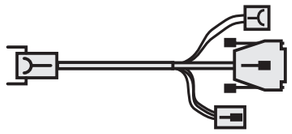	1279881-xx

The connecting element must be suitable for the maximum clock frequency used.
Note for safety-related applications:
- Conformity with the EMC Directive must be ensured in the complete system!

SpeedTEC is a registered trademark of TE Connectivity Industrial GmbH.

Pin layout of ECI, EQI

8-pin M12 SpeedTEC angle flange socket

8

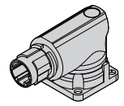

15-pin PCB connector

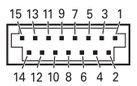

15

2

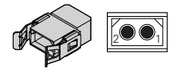

	Encoder			
	Power supply / Serial data transfer		Other signals	
8	**A**	**B**	**/**	**/**
15	**9**	**10**	**5**	**6**
2	**–**	**–**	**2**	**1**
	P_SD+[1]	**P_SD–**[1]	**T+**[2]	**T–**[2]
	Violet	Yellow	Brown	Green

	Motor					
	Brake		**Power**			
8	**C**	**D**	**1**	**2**	**3**	**4**
	Brake +	**Brake –**	**U**	**V**	**W**	**PE**

[1] Power supply and data: P_SD+ includes U_P; P_SD– includes 0 V
[2] Connections for external temperature sensor; evaluation optimized for a KTY 84-130, PT 1000, and other sensors; (see *Temperature measurement in motors* in the *Encoders for Servo Drives* brochure)

Cable shield connected to housing; $\mathbf{U_P}$ = Power supply voltage
Vacant pins or wires must not be used!
Note on safety-related applications: only completely assembled HEIDENHAIN cables are qualified for this.
Do not modify cables or exchange their connectors without first consulting with HEIDENHAIN Traunreut!

SpeedTEC is a registered trademark of TE Connectivity Industrial GmbH.

HEIDENHAIN

DR. JOHANNES HEIDENHAIN GmbH
Dr.-Johannes-Heidenhain-Straße 5
83301 Traunreut, Germany
☏ +49 8669 31-0
FAX +49 8669 32-5061
info@heidenhain.de

www.heidenhain.com

This Product Information document supersedes all previous editions, which thereby become invalid. The basis for ordering from HEIDENHAIN is always the Product Information document edition valid when the order is made.

Further information:

To ensure proper use, comply with the requirements described in the following documents:

- Brochure: *Encoders for Servo Drives* 208922-xx
- Brochure: *Cables and Connectors* 1206103-xx
- Brochure: *Interfaces of HEIDENHAIN Encoders* 1078628-xx
- Product Information doc.: *HMC 2* 1305512-xx
- Technical Information doc.: *EnDat 3* 1305415-xx
- Mounting Instructions: *ECI 1119, EQI 1131* 1306491-xx
- EnDat 3 Application Conditions for Functional Safety 3000003-xx
- Supplementary Application Conditions for EnDat 3 for Step Monitoring (SIL 3, PL e) 1277016-xx

1305740 · 01 · C · 02 · 01/2023 · PDF