HEIDENHAIN

POSITIP 8000

Operating Instructions
Milling

Digital Readout

English (en)
07/2021

Contents

1

Fundamentals

1.1 Overview

This chapter contains information about the product and this manual.

1.2 Information on the product

Product designation	ID	Firmware version	Index
POSITIP 8000	1089176-xx, 1089177-xx	1252216.1.2.x	---

The ID label is provided on the rear panel of the product.

Example:

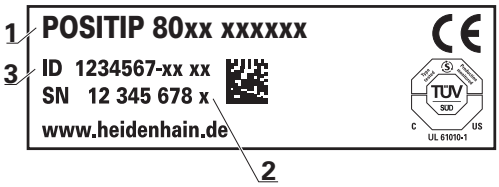

1 Product designation
2 Index
3 ID number

1.3 Overview of new and modified functions

This document provides a short overview of new and modified functions or settings becoming available with version 1252216.1.2.x.

1.4 Demo software for the product

POSITIP 8000 Demo is software you can install on a computer regardless of the device. POSITIP 8000 Demo helps you to become familiar with, try out or present the functions of the device.

You can download the current version of the software here: **www.heidenhain.de**

> To download the installation file from the HEIDENHAIN Portal, you need access rights to the **Software** portal folder in the directory of the appropriate product.
>
> If you do not have access rights to the Portal's **Software** folder, you can request the access rights from your HEIDENHAIN contact person.

1.5 Documentation on the product

1.5.1 Validity of the documentation

Before using the documentation and the product, you need to verify that the documentation matches the product.

- Compare the ID number and the index indicated in the documentation with the corresponding data given on the ID label of the product
- Compare the firmware version given in the documentation with the firmware version of the product

Further information: "Device information", Page 231

> If the ID numbers and indexes as well as the firmware versions match, the documentation is valid

If the ID numbers and indexes do not match so that the documentation is not valid, you will find the current documentation at **www.heidenhain.com**.

1.5.2 Notes on reading the documentation

⚠ WARNING

Fatal accidents, personal injury or property damage caused by non-compliance with the documentation!

Failure to comply with the documentation may result in fatal accidents, personal injury or property damage.

- Read the documentation carefully from beginning to end
- Keep the documentation for future reference

The table below lists the components of the documentation in the order of priority for reading.

Documentation	Description
Addendum	An addendum supplements or supersedes the corresponding contents of the Operating Instructions and, if applicable, of the Installation Instructions. If an addendum is included in the shipment, it has the highest priority for reading. All other contents of the documentation retain their validity.
Installation Instructions	The Installation Instructions contain all of the information and safety precautions needed for the proper mounting and installation of the product. The Installation Instructions are contained as an excerpt from the Operating Instructions in every delivery. The Installation Instructions have the second highest level of priority for reading.
Operating Instructions	The Operating Instructions contain all the information and safety precautions needed for the proper operation of the product according to its intended use. The Operating Instructions are included on the supplied storage medium and can also be downloaded in the download area from **www.heidenhain.com**. The Operating Instructions must be read before the unit is put into service. The Operating Instructions have the third highest level of priority for reading.
User's Manual	The User's Manual provides all information required for installing the demo software on a computer and for using it as intended. The User's Manual is located in the installation folder of the demo software and can be downloaded from the download area at **www.heidenhain.com**.

Have you found any errors or would you like to suggest changes?

We continuously strive to improve our documentation for you. Please help us by sending your suggestions to the following e-mail address:

userdoc@heidenhain.de

1.5.3 Storage and distribution of the documentation

The instructions must be kept in the immediate vicinity of the workplace and must be available to all personnel at all times. The operating company must inform the personnel where these instructions are kept. If the instructions have become illegible, the operating company must obtain a new copy from the manufacturer.

If the product is given or resold to any other party, the following documents must be passed on to the new owner:

- Addendum (if supplied)
- Installation Instructions
- Operating Instructions

1.6 About these instructions

These instructions provide all the information and safety precautions needed for the safe operation of the device.

1.6.1 Document category

Operating Instructions

These instructions are the **Operating Instructions** for the product.

The Operating Instructions

- Is oriented to the product life cycle
- Contains all information and safety precautions needed for the proper operation of the product according to its intended use

1.6.2 Target groups for the instructions

These instructions must be read and observed by every person who performs any of the following tasks:

- Mounting
- Installation
- Commissioning and configuration
- Operation
- Programming
- Service, cleaning and maintenance
- Troubleshooting
- Removal and disposal

1.6.3 Target groups according to user types

The target groups of these instructions refer to the various user types of the product and their authorizations.
The product features the following user types:

OEM user

The **OEM** (Original Equipment Manufacturer) user has the highest level of permissions. This user is allowed to configure the product's hardware (e.g. connection of encoders and sensors). He can create **Setup** and **Operator**-type users, and configure the **Setup** and **Operator** users. The **OEM** user cannot be duplicated or deleted. This user cannot be logged in automatically.

Setup user

The **Setup** user configures the product for use at the place of operation. This user can create **Operator**-type users. The **Setup** user cannot be duplicated or deleted. This user cannot be logged in automatically.

Operator user

The **Operator** user is permitted to use the basic functions of the product.
An **Operator**-type user cannot create additional users, but is allowed to edit various operator-specific settings, such as his name or the language. A user of the **Operator** group can be logged in automatically as soon as the product is switched on.

1.6.4 Contents of the chapters

The table below shows:

- from which chapters these instructions are derived from
- which information the chapters of the instructions contain
- to which target groups the chapters of the instructions mainly apply

Section	Contents	Target group		
	This chapter contains information about…	**OEM**	**Setup**	**Operator**
1 "Fundamentals"	… this product … these instructions	✓	✓	✓
2 "Safety"	… Safety regulations and safety measures ■ for mounting the product ■ for installing the product ■ for operating the product	✓	✓	✓
3 "Transport and storage"	… transporting the product … storing the product … items supplied with the product … accessories for the product	✓	✓	
4 "Mounting"	… correct mounting of the product	✓	✓	
5 "Installation"	… correct installation of the product	✓	✓	

Section	Contents	Target group		
	This chapter contains information about…	**OEM**	**Setup**	**Operator**
6 "Basic operation"	… the operating elements of the product user interface … the user interface of the product … basic functions of the product	✓	✓	✓
7 "Commissioning"	… commissioning the product	✓		
8 "Setup"	… correct setup of the product		✓	
9 "Quick Start"	… a typical manufacturing process based on a sample workpiece			✓
10 "Manual operation"	… the "Manual" mode of operation … using the "Manual" mode of operation		✓	✓
11 "MDI mode"	… the "MDI" mode of operation … using the "MDI" mode of operation … executing single blocks		✓	✓
12 "Program run"	… the "Program Run" mode of operation … using the "Program Run" mode of operation … executing previously created programs		✓	✓
13 "Programming"	… the "Program Run" mode of operation … using the "Program Run" mode of operation … executing previously created programs		✓	✓
14 "File management"	… the functions of the "File management" menu	✓	✓	✓
15 "Settings"	… setting options and associated setting parameters for the product	✓	✓	✓
16 "Servicing and maintenance"	… general maintenance work on the product	✓	✓	✓
17 "What to do if …"	… causes of faults or malfunctions of the product … corrective actions for faults or malfunctions of the product	✓	✓	✓
18 "Removal and disposal"	… disassembly and disposal of the product … environment protection specifications	✓	✓	✓
19 "Specifications"	… the technical data of the product … product dimensions and mating dimensions (drawings)	✓	✓	✓
20 "Index"	This chapter enables accessing the content of these instructions according to specific topics.	✓	✓	✓

1.6.5 Notes in this documentation

Safety precautions

Precautionary statements warn of hazards in handling the product and provide information on their prevention. Precautionary statements are classified by hazard severity and divided into the following groups:

⚠ DANGER

Danger indicates hazards for persons. If you do not follow the avoidance instructions, the hazard **will result in death or severe injury.**

⚠ WARNING

Warning indicates hazards for persons. If you do not follow the avoidance instructions, the hazard **could result in death or serious injury**.

⚠ CAUTION

Caution indicates hazards for persons. If you do not follow the avoidance instructions, the hazard **could result in minor or moderate injury.**

NOTICE

Notice indicates danger to material or data. If you do not follow the avoidance instructions, the hazard **could result in property damage**.

Informational notes

Informational notes ensure reliable and efficient operation of the product. Informational notes are divided into the following groups:

The information symbol indicates a **tip**.

A tip provides additional or supplementary information.

The gear symbol indicates that the function described **depends on the machine**, e.g.

- Your machine must feature a certain software or hardware option
- The behavior of the functions depends on the configurable machine settings

The book symbol represents a **cross reference** to external documentation, e.g. the documentation of your machine tool builder or other supplier.

1.6.6 Symbols and fonts used for marking text

In these instructions the following symbols and fonts are used for marking text:

Depiction	Meaning
▶ ... > ...	Identifies an action and the result of this action Example: ▶ Tap **OK** > The message is closed
■ ... ■ ...	Identifies an item of a list Example: ■ TTL interface ■ EnDat interface ■ ...
Bold	Identifies menus, displays and buttons Example: ▶ Tap **Shut down** > The operating system shuts down ▶ Turn the power switch off

2

Safety

2.1 Overview

This chapter provides important safety information needed for the proper operation of the unit.

2.2 General safety precautions

General accepted safety precautions, in particular the applicable precautions relating to the handling of live electrical equipment, must be followed when operating the system. Failure to observe these safety precautions may result in personal injury or damage to the product.

It is understood that safety rules within individual companies vary. If a conflict exists between the material contained in these instructions and the rules of a company using this system, the more stringent rules take precedence.

2.3 Intended use

The products of the POSITIP 8000 series are advanced digital readouts for use on manually operated machine tools. In combination with linear and angle encoders, digital readouts of the POSITIP 8000 series return the position of the tool in more than one axis and provide further functions for operating the machine tool.

The POSITIP 8000 NC1 software option can automate the production of a workpiece.

The products of this series

- must only be used in commercial applications and in an industrial environment
- must be mounted on a suitable stand or holder to ensure the correct and intended operation of the product
- are intended for indoor use in an environment in which the contamination caused by humidity, dirt, oil and lubricants complies with the requirements of the specifications

The products support the use of peripheral devices from different manufacturers. HEIDENHAIN cannot make any statements on the intended use of these devices. The information on their intended use, which is provided in the respective documentation, must be observed.

2.4 Improper use

In particular, the products of the POSITIP 8000 series must not be used in the following applications:

- Use and storage outside the operating conditions specified in "Specifications"
- Outdoor use
- Use in potentially explosive atmospheres
- Use of the products of the POSITIP 8000 series as part of a safety function

2.5 Personnel qualification

The personnel for mounting, installation, operation, service, maintenance and removal must be appropriately qualified for this work and must have obtained sufficient information from the documentation supplied with the product and with the connected peripherals.

The personnel required for the individual activities to be performed on the product are indicated in the respective sections of these instructions.

The personnel groups are specified in detail as follows with regard to their qualifications and tasks.

Operator

The operator uses and operates the product within the framework specified for the intended use. He is informed by the operating company about the special tasks and the potential hazards resulting from incorrect behavior.

Qualified personnel

The qualified personnel are trained by the operating company to perform advanced operation and parameterization. The qualified personnel have the required technical training, knowledge and experience and know the applicable regulations, and are thus capable of performing the assigned work regarding the application concerned and of proactively identifying and avoiding potential risks.

Electrical specialist

The electrical specialist has the required technical training, knowledge and experience and knows the applicable standards and regulations, and is thus capable of performing work on electrical systems and of proactively identifying and avoiding potential risks. Electrical specialists have been specially trained for the environment they work in.

Electrical specialists must comply with the provisions of the applicable legal regulations on accident prevention.

2.6 Obligations of the operating company

The operating company owns or leases the device and the peripherals. At all times, the operating company is responsible for ensuring that the intended use is complied with.

The operating company must:

- Assign the different tasks to be performed on the device to suitable, qualified and authorized personnel
- Verifiably train the personnel in the authorizations and tasks
- Provide all materials and means necessary in order for the personnel to complete the assigned tasks
- Ensure that the device is operated only when in perfect technical condition
- Ensure that the device is protected from unauthorized use

2.7 General safety precautions

	The safety of any system incorporating the use of this product is the responsibility of the assembler or installer of the system.

	The product supports the use of a wide variety of peripheral devices from different manufacturers. HEIDENHAIN cannot make any statements on the specific safety precautions to be taken for these devices. The safety precautions provided in the respective documentation must be observed. If there is no documentation at hand, it must be obtained from the manufacturers concerned.

The specific safety precautions required for the individual activities to be performed on the product are indicated in the respective sections of these instructions.

2.7.1 Symbols on the product

The following symbols are used to identify the product:

Symbol	Meaning
	Observe the safety precautions regarding electricity and the power connection before you connect the product.
	Functional ground connection as per IEC/EN 60204-1. Observe the information on installation.
	Product seal. Breaking or removing the product seal will result in forfeiture of warranty and guarantee.

2.7.2 Electrical safety precautions

⚠ WARNING

Hazard of contact with live parts when opening the product.

This may result in electric shock, burns or death.

- Never open the housing
- Only the manufacturer is permitted to access the inside of the product

⚠ WARNING

Hazard of dangerous amount of electricity passing through the human body upon direct or indirect contact with live electrical parts.

This may result in electric shock, burns or death.

- Work on the electrical system and live electrical components is to be performed only by trained specialists
- For power connection and all interface connections, use only cables and connectors that comply with applicable standards
- Have the manufacturer exchange defective electrical components immediately
- Regularly inspect all connected cables and all connections on the product. Defects, such as loose connections or scorched cables, must be removed immediately

NOTICE

Damage to internal parts of the product!

If you open the product, the warranty and the guarantee will become void.

- Never open the housing
- Only the product manufacturer is permitted to access the inside of the product

3

Transport and storage

3.1 Overview

This chapter contains information on the transportation and storage of the product and provides an overview of the items supplied and the available accessories for the product.

> The following steps must be performed only by qualified personnel.
> **Further information:** "Personnel qualification", Page 29

3.2 Unpacking

- Open the top lid of the box
- Remove the packaging materials
- Unpack the contents
- Check the delivery for completeness
- Check the delivery for damage

3.3 Items supplied and accessories

3.3.1 Items supplied

The following items are included in delivery:

Name	Description
Addendum (optional)	Supplements or supersedes the contents of the Operating Instructions and, if applicable, of the Installation Instructions.
Operating Instructions	PDF issue of the Operating Instructions on a memory medium in the currently available languages
Product	Digital Readout POSITIP 8000
Installation Instructions	Printed issue of the Installation Instructions in the currently available languages
Single-Pos stand	Stand for rigid mounting, inclination angle 20°, fixing hole pattern 100 mm x 100 mm

3.3.2 Accessories

> Software options need to be enabled on the product via a license key. Before you can use the associated hardware components, you need to enable the respective software option.
>
> **Further information:** "Activating the Software options", Page 94

The following accessories are optionally available and can be ordered from HEIDENHAIN:

Acces-sories	Name	Description	ID
For operation			
	POSITIP 8000 AEI1 software option	Enabling of an additional encoder input	1089228-02
	POSITIP 8000 AEI1 Trial software option	Enabling of an additional encoder input; trial version for a limited time (60 days)	1089228-52
	POSITIP 8000 NC1 software option	Feedback control of one axis (servo motor or stepper motor) of the machine tool	1089228-03
	POSITIP 8000 NC1 Trial software option	Feedback control of one axis (servo motor or stepper motor) of the machine tool; trial version for a limited time (60 days)	1089228-53
For installation			
	Adapter connector for 1 Vpp	Conversion of the 1 V_{PP} interface from installation in D-sub connector, 2-row, male, 15-pin to D-sub connector, 2-row, with locking screws, male, 15-pin	1089214-01
	Cables	For information on connecting cables, see "Cables and Connectors for HEIDENHAIN Products" brochure.	---
	KT 130 edge finder	Touch probe for probing a workpiece (for setting presets)	283273-xx
	Power cable	Power cable with European plug (type F), length: 3 m	223775-01
	TS 248 touch probe	Touch probe for probing a workpiece (for setting presets), axial cable outlet	683110-xx
	TS 248 touch probe	Touch probe for probing a workpiece (for setting presets), radial cable outlet	683112-xx
	USB connecting cable	USB connecting cable for connector type A to type B	354770-xx
For mounting			

Acces-sories	Name	Description	ID
	Duo-Pos stand	Stand for rigid mounting, inclination angle 20° or 45°, fixing hole pattern 100 mm x 100 mm	1089230-02
	Mounting frame	Mounting frame for mounting of the QUADRA-CHEK 3000 and POSITIP 8000 subsequent electronics in a panel	1089208-02
	Multi-Pos holder	Holder for fastening the device on an arm, continuously tiltable within an angle of 90°, fixing hole pattern 100 mm x 100 mm	1089230-04
	Multi-Pos stand	Stand for continuously variable tilting within an angle of 90°, fixing hole pattern 100 mm x 100 mm	1089230-03
	Single-Pos stand	Stand for rigid mounting, inclination angle 20°, fixing hole pattern 100 mm x 100 mm	1089230-01

3.4 In case of damage in transit

- Have the shipping agent confirm the damage
- Keep the packaging materials for inspection
- Notify the sender of the damage
- Contact the distributor or machine manufacturer for replacement parts

> If damage occurred during transit:
> - Keep the packaging materials for inspection
> - Contact HEIDENHAIN or the machine manufacturer
>
> This applies also if damage occurred to requested replacement parts during transit.

3.5 Repackaging and storage

Repackage and store the product carefully in accordance with the conditions stated below.

3.5.1 Repackaging the product

Repackaging should correspond to the original packaging as closely as possible.

- Re-attach all mounting parts and dust protection caps to the product as received from the factory, or repackage them in the original packaging as received from the factory
- Repackage the product in such a way that
  - it is protected from impact and vibration during transit
  - it is protected from the ingress of dust or humidity
- Place all accessories that were included in the shipment in the original packaging
  Further information: "Items supplied and accessories", Page 34
- Enclose all the documentation that was included in the original packaging
  Further information: "Storage and distribution of the documentation", Page 21

> If the product is returned for repair to the Service department:
> - Ship the product without accessories, without encoders and without peripherals

3.5.2 Storage of the product

- Package the product as described above
- Observe the specified ambient conditions
  Further information: "Specifications", Page 313
- Inspect the product for damage after any transport or longer storage times

4

Mounting

4.1 Overview

This chapter describes the mounting of the product. It contains instructions about how to correctly mount the product on stands or holders.

> The following steps must be performed only by qualified personnel.
> **Further information:** "Personnel qualification", Page 29

4.2 Assembly of the product

General mounting information

The mount for the mounting variants is provided on the rear panel. The connection is compatible with the VESA standard 100 mm x 100 mm.

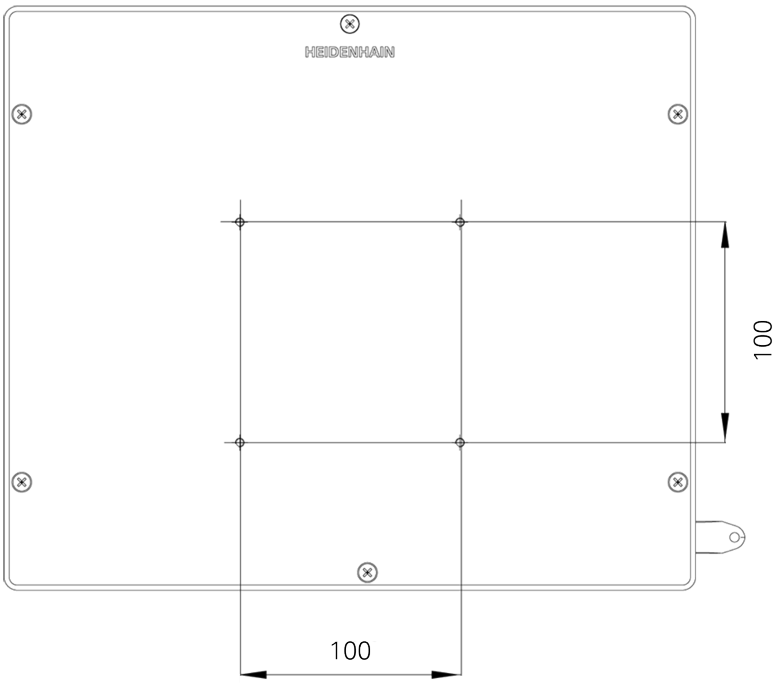

Figure 1: Dimensions of the rear panel

The materials for attachment of the mounting variants on the device are included in delivery.

You will also need the following:

- Torx T20 screwdriver
- Torx T25 screwdriver
- Allen key, size 2.5 (Duo-Pos stand)
- Materials for mounting on a supporting surface

> The unit must be mounted to a stand or a holder to ensure the correct and intended use of the product.

4.2.1 Mounting on Single-Pos stand

You can fasten the Single-Pos stand to the product at a 20° angle.

- Use the provided M4 x 8 ISO 14581 countersunk head screws to fasten the stand to the upper VESA 100 threaded holes on the rear panel

> Comply with the permissible tightening torque of 2.6 Nm

- Fasten the stand with two suitable screws from above to a supporting surface

or

- Attach self-adhesive rubber pads to the underside of the stand
- Route the cables from behind through the opening in the stand and then to the connections

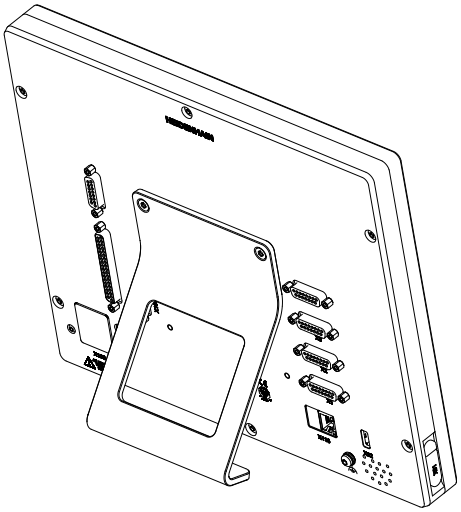

Figure 2: Product mounted on Single-Pos stand

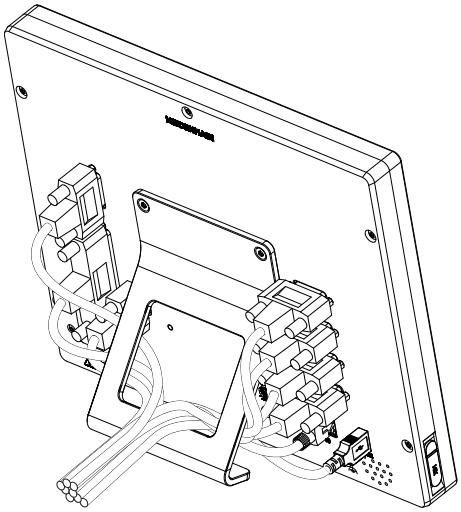

Figure 3: Cable routing on Single-Pos stand

Further information: "Product dimensions with Single-Pos stand", Page 318

4.2.2 Mounting on Duo-Pos stand

You can fasten the Duo-Pos stand to the product at a 20° or 45° angle.

- Use the provided M4 x 8 ISO 7380 hexagon socket screws to fasten the stand to the lower VESA 100 threaded holes on the rear panel

> Comply with the permissible tightening torque of 2.6 Nm

- Using the mounting slots (width = 4.5 mm), screw the stand to a supporting surface

or

- Set up the device freely at the desired location
- Route the cable from behind through the two supports of the stand and then through the lateral openings to the connections

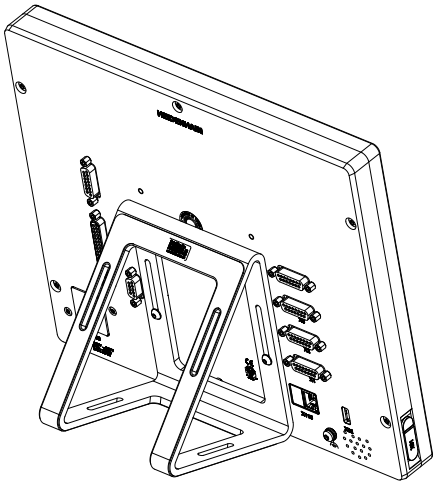

Figure 4: Product mounted on Duo-Pos stand

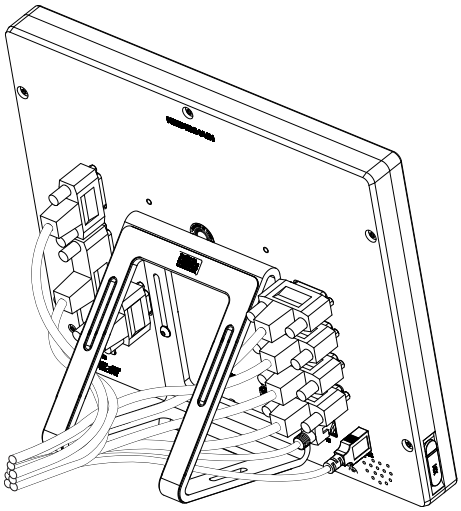

Figure 5: Cable routing on Duo-Pos stand

Further information: "Product dimensions with Duo-Pos stand", Page 318

4.2.3 Mounting on Multi-Pos stand

- Use the provided M4 x 8 ISO 14581 countersunk head screws (black) to fasten the stand to the VESA 100 threaded holes on the rear panel

> Comply with the permissible tightening torque of 2.6 Nm

- Using two M5 screws, you can also optionally screw the stand to a supporting surface from the bottom
- Adjust the desired angle of inclination within the tilting range of 90°
- To fix the stand: Tighten the T25 screw

> Comply with the tightening torque for screw T25
> - Recommended tightening torque: 5.0 Nm
> - Maximum permissible tightening torque: 15.0 Nm

- Route the cable from behind through the two supports of the stand and then through the lateral openings to the connections

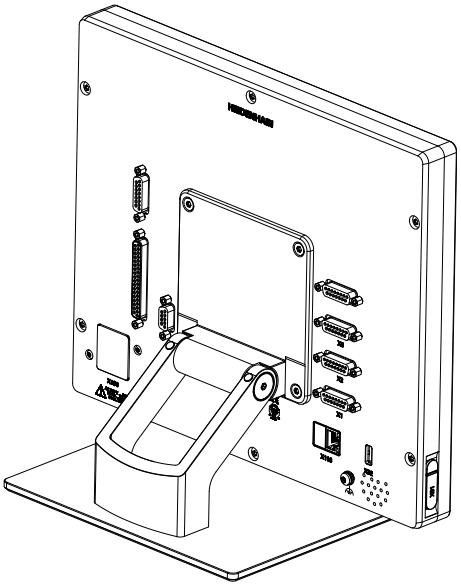

Figure 6: Product mounted on Multi-Pos stand

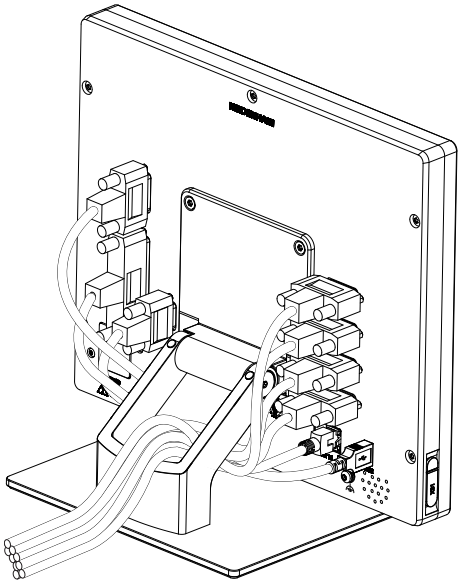

Figure 7: Cable routing on Multi-Pos stand

Further information: "Product dimensions with Multi-Pos stand", Page 319

4.2.4 Mounting on Multi-Pos holder

- Use the provided M4 x 8 ISO 14581 countersunk head screws (black) to fasten the holder to the VESA 100 threaded holes on the rear panel

> Comply with the permissible tightening torque of 2.6 Nm

- Mount the holder with the supplied M8 screw, the washers, the handle and the M8 hexagon nut to an arm

or

- Mount the holder with two screws <7 mm through the two holes to the intended surface
- Adjust the desired angle of inclination within the tilting range of 90°
- To fix the holder in place: tighten the T25 screw

> Comply with the tightening torque for screw T25
> - Recommended tightening torque: 5.0 Nm
> - Maximum permissible tightening torque: 15.0 Nm

- Route the cable from behind through the two supports of the holder and then through the lateral openings to the connections

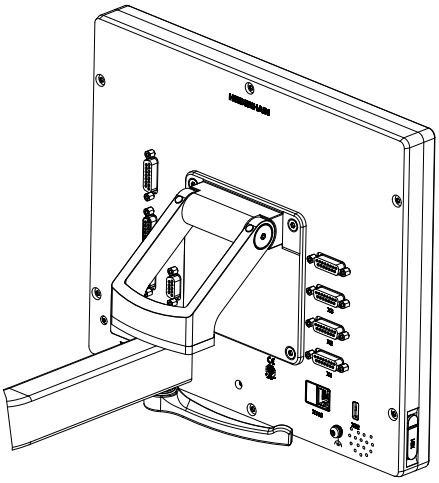

Figure 8: Product mounted on Multi-Pos holder

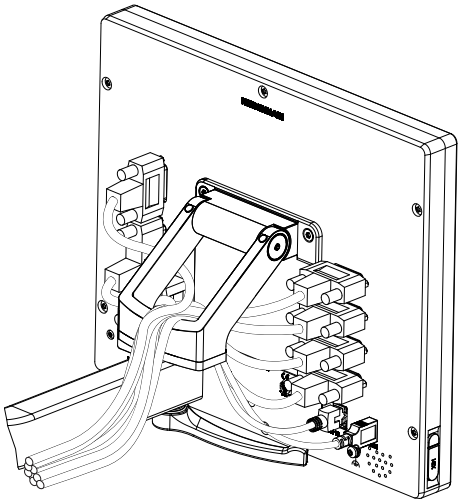

Figure 9: Cable routing on Multi-Pos holder

Further information: "Product dimensions with Multi-Pos holder", Page 319

5

Installation

5.1 Overview

This chapter describes the Installation of the product. It contains information about the product's connections and instructions about how to correctly connect the peripheral devices.

> The following steps must be performed only by qualified personnel.
> **Further information:** "Personnel qualification", Page 29

5.2 General information

NOTICE

Interference from sources of high electromagnetic emission!

Peripheral devices, such as frequency inverters or servo drives, may cause interference.

To increase the noise immunity to electromagnetic influences:

- Use the optional functional ground connection as per IEC/EN 60204-1
- Use only USB peripherals with continuous shielding, e.g. by metalized film and metal braiding or a metal housing. The degree of coverage provided by the braiding must be 85 % or higher. The shield must be connected around the entire circumference of the connectors (360° connection).

NOTICE

Damage to the device from the engaging and disengaging of connecting elements during operation!

Damage to internal components may result.

- Do not engage or disengage any connecting elements while the unit is under power

NOTICE

Electrostatic discharge (ESD)!

This device contains electrostatic sensitive components that can be destroyed by electrostatic discharge (ESD).

- It is essential to observe the safety precautions for handling ESD-sensitive components
- Never touch connector pins without ensuring proper grounding
- Wear a grounded ESD wristband when handling device connections

NOTICE

Damage to the product due to incorrect wiring!

The incorrect wiring of inputs or outputs can cause damage to the product or to peripheral devices.

- Comply with the pin layouts and specifications of the product
- Assign only pins or wires that will be used

Further information: "Specifications", Page 313

5.3 Device overview

The connections on the rear panel of the device are protected by dust protection caps from contamination and damage.

NOTICE

Contamination or damage may result if the dust protection caps are missing!

If no dust protection caps are fitted to unused connections, this may impair the proper functioning of the contacts or destroy them.

- Remove dust protection caps only when connecting measuring devices or peripherals
- If you remove a measuring device or peripheral, re-attach the dust protection cap to the connection

The type of connections for encoders may vary depending on the product version.

Rear panel without dust protection caps

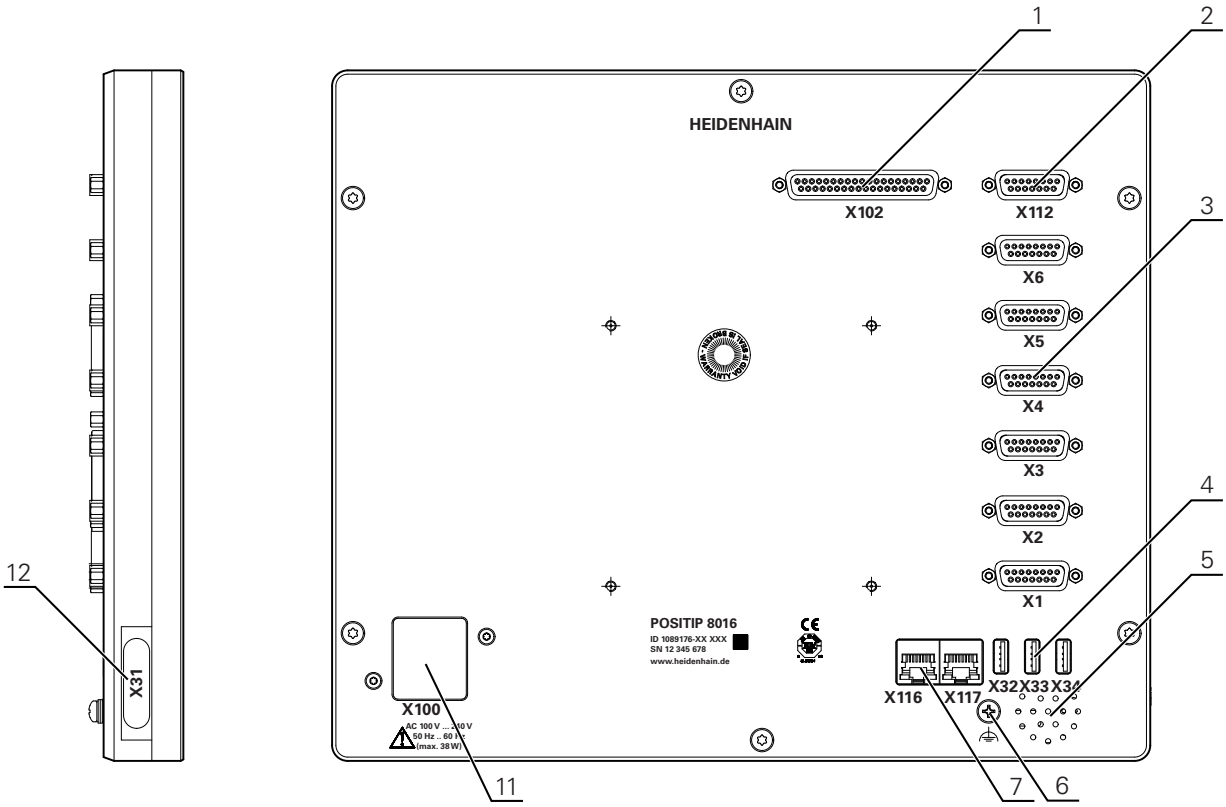

Figure 10: Rear panel of devices with ID 1089176-xx

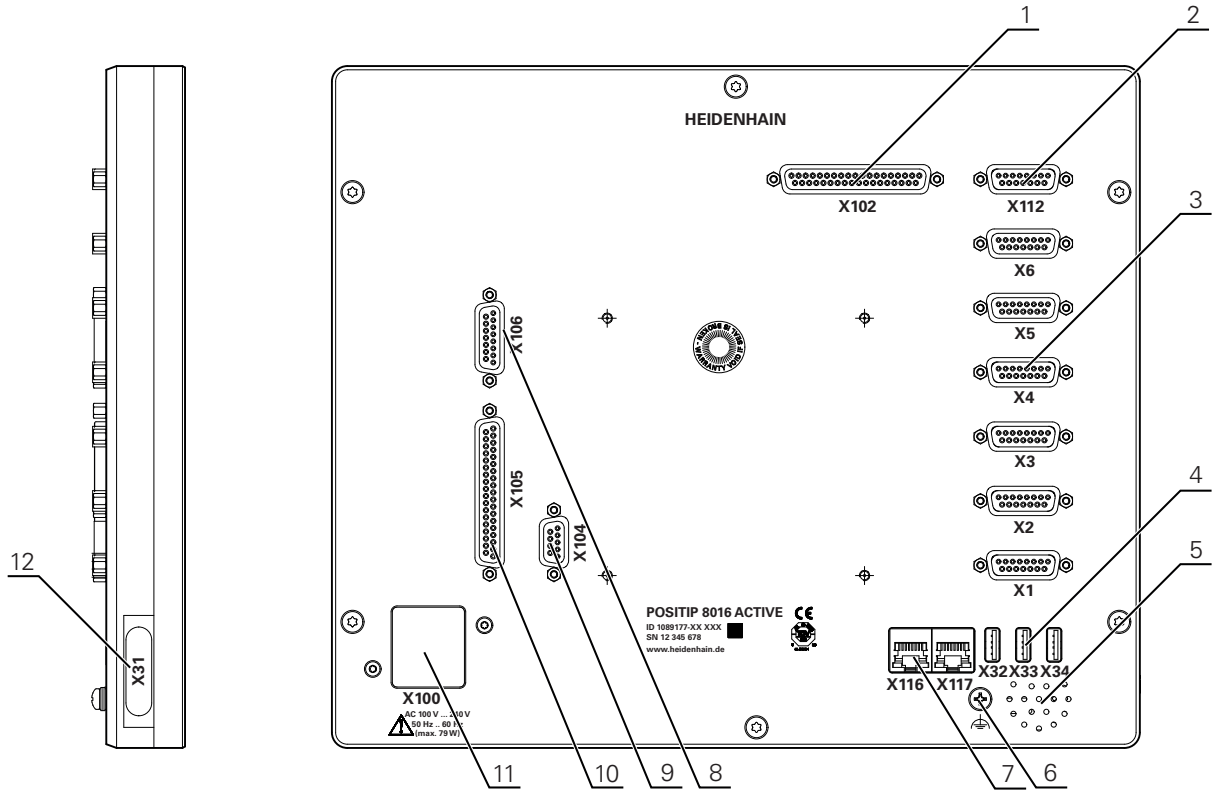

Figure 11: Rear panel of devices with ID 1089177-xx

Connections:

1 **X102**: 37-pin D-sub connection for digital TTL interface (8 inputs, 16 outputs)

2 **X112**: 15-pin D-sub connection for touch probes (e.g. HEIDENHAIN touch probe)

3 **X1-X6**: 15-pin D-sub connections for encoder with interfaces of the type 1 V_{PP}, 11µA_{PP} or EnDat 2.2

Four inputs enabled by default, with option of enabling another two inputs

4 **X32-X34**: USB 2.0 Hi-Speed connection (Type-A) for USB mass storage device

5 Speaker

6 Functional ground connection as per IEC/EN 60204-1

7 **X116**: RJ45 Ethernet connection for communication and data exchange with downstream systems or PC

X117: Not currently supported

11 **X100**: Power switch and power connection

Additional connections on devices with ID 1089177-xx:

8 **X106**: 15-pin D-sub connection for analog interface (4 inputs, 4 outputs)

9 **X104**: 9-pin D-sub connection for universal relay interface (2x relay changeover contacts)

10 **X105**: 37-pin D-sub connection for digital interface (DC 24 V; 24 switching inputs, 8 switching outputs)

Left side panel

12 **X31** (under protective cover): USB 2.0 Hi-Speed connection (Type-A) for USB mass storage device

5.4 Connecting encoders

> For encoders with an EnDat 2.2 interface: If the corresponding encoder input has already been assigned to an axis in the device settings, then the encoder is automatically detected upon restart, and the settings are adapted. Alternatively, you can assign the encoder input after you have connected the encoder.

- Comply with the pin layout
- Remove and save the dust protection cap
- Route the cables depending on the mounting variant

Further information: "Assembly of the product", Page 40

- Connect the encoder cables tightly to the respective connections

Further information: "Device overview", Page 47

- If the cable connectors include mounting screws, do not overtighten them

Pin layout of X1, X2, X3, X4, X5, X6

1 V_{PP}, 11 μA_{PP}, EnDat 2.2

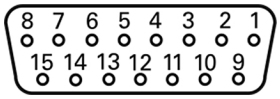

	1	2	3	4	5	6	7	8
1 V_{PP}	A+	0 V	B+	U_P	/	/	R–	/
11 μA_{PP}	I_{1+}		I_{2+}		/	Inter-nal shield	I_{0+}	/
EnDat	/		/		DATA		/	CLOCK
	9	**10**	**11**	**12**	**13**	**14**	**15**	
1 V_{PP}	A–	Sense 0 V	B–	Sense U_P	/	R+	/	
11 μA_{PP}	I_{1-}		I_{2-}		/	I_{0+}	/	
EnDat	/		/		$\overline{DATA}$	/	$\overline{CLOCK}$	

5.5 Connecting touch probes

The following touch probes can be connected to the unit:
- HEIDENHAIN TS 248 touch probe
- HEIDENHAIN KT 130 edge finder

Further information: "Items supplied and accessories", Page 34

- Comply with the pin layout
- Remove and save the dust protection cap
- Route the cables depending on the mounting variant

Further information: "Assembly of the product", Page 40

- Connect the touch probe firmly

Further information: "Device overview", Page 47

- If the cable connectors include mounting screws, do not overtighten them

Pin layout of X112

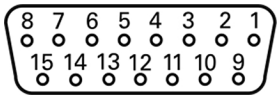

1	2	3	4	5	6	7	8
LED+	B 5 V	B 12 V	/	DC 12 V	DC 5 V	/	GND
9	**10**	**11**	**12**	**13**	**14**	**15**	
/	/	TP	GND	TP	/	LED–	

B – Probe signals, readiness
TP – Touch Probe, normally closed

Touch probe:

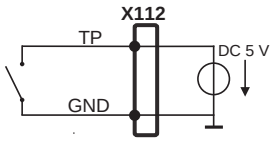

5.6 Wiring switching inputs and outputs

⚠ WARNING

Hazard when using switching inputs for safety functions!

If switching inputs for mechanical limit switches are used for safety functions, severe injury or death can result.

- Do not use the switching inputs for mechanical limit switches for safety functions

Depending on the peripherals to be connected, the connection work may need to be carried out by an electrical specialist.

Example: Safety Extra Low Voltage (SELV) exceeded

Further information: "Personnel qualification", Page 29

The product fulfills the requirements of standard IEC 61010-1 only if the power to the peripheral devices is supplied from a secondary circuit with current limitation as per IEC 61010-1 3rd Ed., Section 9.4 or with power limitation as per IEC 60950-1 2nd Ed., Section 2.5 or from a Class 2 secondary circuit as specified in UL1310.

In place of IEC 61010-1 3rd Ed., Section 9.4, the corresponding sections of standards DIN EN 61010-1, EN 61010-1, UL 61010-1 and CAN/CSA-C22.2 No. 61010-1 can be used, and, in place of IEC 60950-1 2nd Ed., Section 2.5, the corresponding sections of standards DIN EN 60950-1, EN 60950-1, UL 60950-1, CAN/CSA-C22.2 No. 60950-1 can be applied.

- Wire switching inputs and outputs in accordance with the following pin layout
- Remove and save the dust protection cap
- Route the cables depending on the mounting variant

Further information: "Assembly of the product", Page 40

- Connect the connecting cables of the peripherals tightly to their connectors

Further information: "Device overview", Page 47

- If the cable connectors include mounting screws, do not overtighten them

The digital or analog inputs and outputs must be assigned in the device settings of the respective switching function.

Pin layout of X102

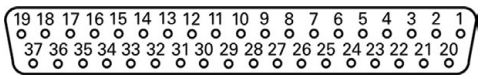

1	2	3	4	5	6	7	8
GND	Din 1	Din 3	Din 4	Din 6	GND	Dout 0	Dout 2
9	**10**	**11**	**12**	**13**	**14**	**15**	**16**
Dout 4	GND	Dout 6	Dout 8	Dout 10	GND	Dout 12	Dout 14
17	**18**	**19**	**20**	**21**	**22**	**23**	**24**
/	/	GND	Din 0	Din 2	DC 5 V	Din 5	Din 7
25	**26**	**27**	**28**	**29**	**30**	**31**	**32**
GND	Dout 1	Dout 3	Dout 5	GND	Dout 7	Dout 9	Dout 11
33	**34**	**35**	**36**	**37**			
GND	Dout 13	Dout 15	/	/			

Digital inputs:

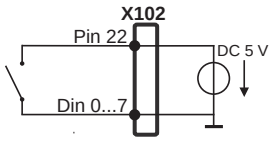

Digital outputs:

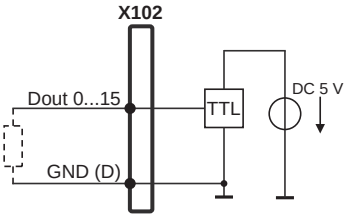

Pin layout of X104

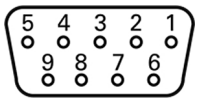

1	2	3	4	5	6	7	8	9
R-0 NO	R-0 NC	/	R-1 NO	R-1 NC	R-0 CO	/	/	R-1 CO

CO – Change Over
NO – Normally Open
NC – Normally Closed

Relay outputs:

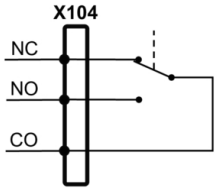

Pin layout of X105

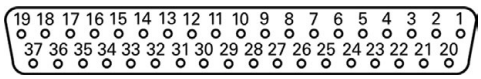

1	**2**	**3**	**4**	**5**	**6**	**7**	**8**
Din 0	Din 2	Din 4	Din 6	Din 8	Din 10	Din 12	Din 14
9	**10**	**11**	**12**	**13**	**14**	**15**	**16**
Din 16	Din 18	Din 20	Din 22	Dout 0	Dout 2	Dout 4	Dout 6
17	**18**	**19**	**20**	**21**	**22**	**23**	**24**
DC 24 V	DC 24 V	GND	Din 1	Din 3	Din 5	Din 7	Din 9
25	**26**	**27**	**28**	**29**	**30**	**31**	**32**
Din 11	Din 13	Din 15	Din 17	Din 19	Din 21	Din 23	Dout 1
33	**34**	**35**	**36**	**37**			
Dout 3	Dout 5	Dout 7	DC 24 V	GND			

Digital inputs:

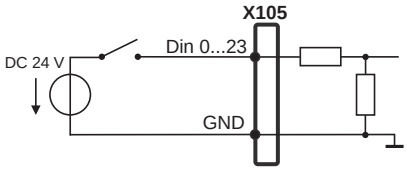

Digital outputs:

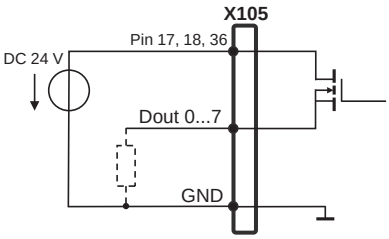

Pin layout of X106

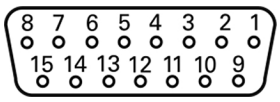

1	2	3	4	5	6	7	8
Aout 0+	Aout 1+	Aout 2+	Aout 3+	GND	GND	Ain 1	Ain 3
9	**10**	**11**	**12**	**13**	**14**	**15**	
Aout 0–	Aout 1–	Aout 2–	Aout 3–	DC 5 V	Ain 0	Ain 2	

Analog inputs:

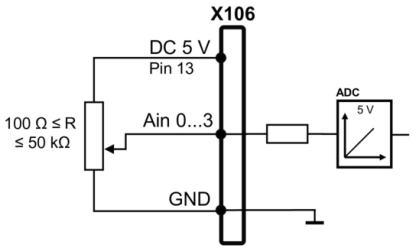

Analog outputs:

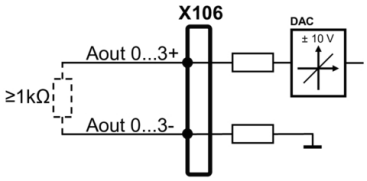

5.7 Connecting input devices

- Comply with the pin layout
- Remove and save the dust protection cap
- Route the cables based on the mounting variant

Further information: "Assembly of the product", Page 40

- Connect USB mouse or USB keyboard to USB Type-A port (X31, X32, X33, X34). Make sure the USB cable connector is fully inserted

Further information: "Device overview", Page 47

Pin layout of X31, X32, X33, X34

1	2	3	4
DC 5 V	Data (–)	Data (+)	GND

5.8 Connecting a network peripheral

- Comply with the pin layout
- Remove and save the dust protection cap
- Route the cables depending on the mounting variant

Further information: "Assembly of the product", Page 40

- Connect the network peripheral to Ethernet port X116 using a standard CAT.5 cable. The cable connector must firmly engage in the port

Further information: "Device overview", Page 47

Pin layout of X116

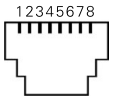

1	2	3	4	5	6	7	8
D1+ (TX+)	D1- (TX-)	D2+ (RX+)	D3+	D3–	D2– (RX–)	D4+	D4–

5.9 Connecting the line voltage

⚠ WARNING

Risk of electric shock!

Improper grounding of electrical devices may result in serious personal injury or death by electric shock.

- Always use 3-wire power cables
- Make sure the ground wire is correctly connected to the ground of the building's electrical installations

⚠ WARNING

Fire hazard due to wrong power cable!

Use of a power cable that does not meet the requirements of the mounting location may cause a fire hazard.

- Use only a power cable that meets at least the national requirements of the respective country in which the product is mounted

- Comply with the pin layout
- Connect the power connection to a 3-wire grounded power outlet using a power cable that meets requirements

Further information: "Device overview", Page 47

Pin layout X100

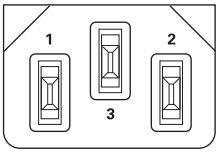

1	2	3
L/N	N/L	⏚

6

Basic operation

6.1 Overview

This chapter describes the user interface, operating elements, and basic functions of the product.

6.2 Using the touchscreen and input devices

6.2.1 Touchscreen and input devices

The operating elements on the user interface of the unit are operated via a touchscreen or a connected USB mouse.

To enter data, you can use the screen keyboard of the touchscreen or a connected USB keyboard.

NOTICE

Malfunctions of the touchscreen caused by humidity or contact with water!

Humidity or water can impair the proper functioning of the touchscreen.

- Protect the touchscreen from humidity or contact with water
  Further information: "Product data", Page 314

6.2.2 Gestures and mouse actions

To activate, switch or move the operating elements of the user interface, you can use the unit's touchscreen or a mouse. Gestures are used to operate the touchscreen and the mouse.

The gestures for operating the touchscreen may differ from the gestures for operating the mouse.

If the gestures for operating the touchscreen differ from those for operating the mouse, then these instructions describe both operating options as alternative actions.

The alternative actions for operating the touchscreen or the mouse are identified by the following symbols:


Operation using the touchscreen


Operation using the mouse

The following overview describes the different gestures for operating the touchscreen or the mouse:

Tapping	
	Means touching the screen briefly with your fingertip
	Means pressing the left mouse button once

The actions initiated by tapping include

- Selection of menus, features, or parameters
- Entering characters with the screen keyboard
- Closing dialogs

Holding (long press)	
	Means touching the screen and holding your finger(s) on it for a few seconds
	Means pressing the left mouse button once and holding it down

The actions initiated by holding are

- Quickly changing the values in input fields with plus and minus buttons

Dragging	
	Is a combination of long press and then swipe, moving a finger over the touchscreen when at least the starting point of motion is defined
	Means pressing the left mouse button once and holding it down while moving the mouse; at least the starting point of the motion is defined

The actions initiated by dragging include

- Scrolling through lists and texts

6.3 General operating elements and functions

The operating elements described below are available for configuration and operating the product via the touchscreen or input devices.

Screen keyboard

With the screen keyboard, you can enter text into the input fields of the user interface. Depending on the input field, a numeric or alphanumeric screen keyboard is shown.

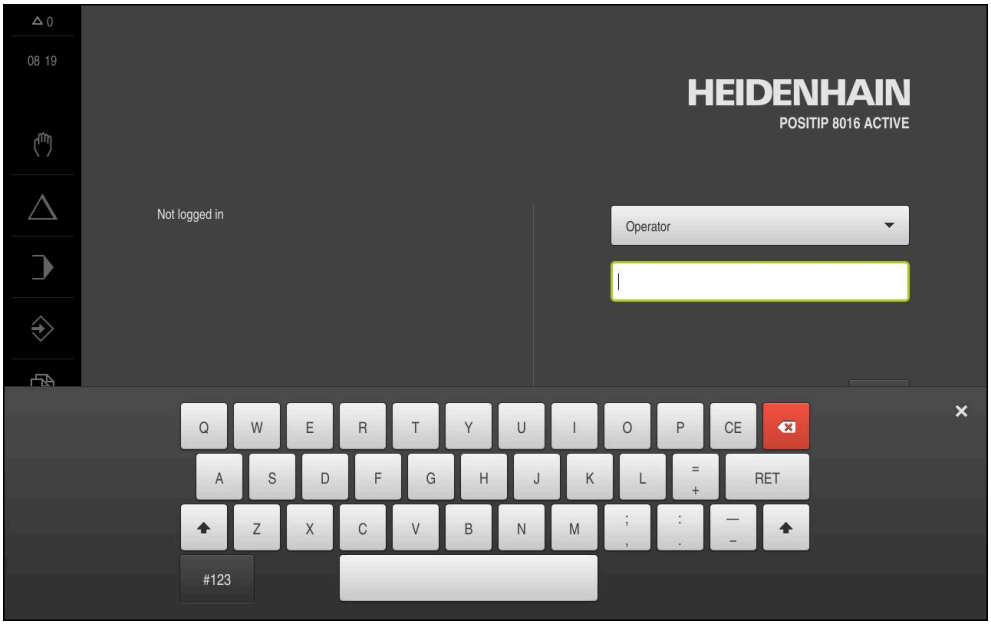

Figure 12: Screen keyboard

- ▶ To enter values, tap an input field
- > The input field is highlighted
- > The screen keyboard is displayed
- ▶ Enter text or numbers
- > The correctness of the entry in the input field is shown with a green check mark, if applicable
- > If the entry is incomplete or incorrect, a red exclamation mark is displayed. In this case, the entry cannot be completed
- ▶ To apply the values, confirm the entry with **RET**
- > The values are displayed
- > The screen keyboard disappears

Input fields with plus and minus buttons

To adjust a numerical value, use the **+** (plus) and **-** (minus) buttons to the left and right of the numerical value.

- ▶ Tap **+** or **-** until the desired value is displayed
- ▶ Long-press **+** or **-** to scroll through the values more quickly
- > The selected value is displayed

Toggle switch

Use the toggle switch to switch between functions.

- ▶ Tap the desired function
- > The active function is shown in green
- > The inactive function is shown in light gray

Slide switch

With the slide switch, you can activate or deactivate a function.

- ▶ Drag the slide switch to the desired position

or

- ▶ Tap the slide switch
- > The function is activated or deactivated

Drop-down list

Buttons that open drop-down lists are indicated by a triangle pointing down.

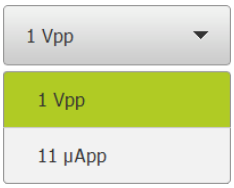

- ▶ Tap the button
- > The drop-down list opens
- > The active entry is highlighted in green
- ▶ Tap the desired entry
- > The selected entry is applied

Undo

With this button, you can undo the last action.
Processes that have already been concluded cannot be undone.

- ▶ Tap **Undo**
- > The last action is undone

Add

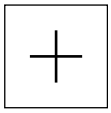

- ▶ To add a feature, tap **Add**
- > The new feature is added

Close

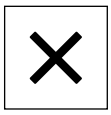

- ▶ Tap **Close** to close a dialog

Confirm

- ▶ Tap **Confirm** to conclude an activity

Back

- Tap **Back** to return to the higher level in the menu structure

6.4 POSITIP 8000 – switch-on and switch-off

6.4.1 Switching on the POSITIP 8000

> Before using the product, you need to perform the commissioning and setup steps. Depending on the purpose of use, you may have to configure additional setup parameters.
> **Further information:** "Commissioning", Page 89

- Turn the power switch on
  The power switch is located on the rear side of the product
- > The unit powers up. This can take a moment
- > If automatic user login is active and the last user who logged in was of the **Operator** type, the user interface opens with the **Manual operation** menu
- > If automatic user login is not active, the **User login** menu is displayed
  Further information: "User login and logout", Page 63

6.4.2 Activating and deactivating the energy saving mode

If you will not be using the unit for a while, you should activate the energy-saving mode. This switches the unit to an inactive state without interrupting the power supply. The screen is switched off in this state.

Activating energy-saving mode

- Tap **Switch off** in the main menu

- Tap **Energy-saving mode**
- > The screen switches off

Deactivating energy-saving mode

- Tap anywhere on the touchscreen
- > An arrow appears at the bottom of the screen
- Drag the arrow up
- > The screen is switched on and shows the user interface last displayed

6.4.3 Switching off the POSITIP 8000

NOTICE

Damage to the operating system!

Disconnecting the power source while the product is on can damage the operating system of the product.

- Use the **Switch-off** menu to shut down the product
- Do not disconnect the power source while the product is on
- Do not turn the power switch off until the product has shut down

- Tap **Switch off** in the main menu

- Tap **Shut down**
- > The operating system shuts down
- Wait until the following message appears on the screen: **You can switch off the device now.**
- Turn the power switch off

6.5 User login and logout

In the **User login** menu, you can log in and out of the product as a user.

Only one user can be logged in to the product at a time. The logged-in user is displayed. Before a new user can log in, the logged-in user has to log out.

The product provides various authorization levels that grant the user full or restricted access to management and operation functionality.

6.5.1 User login

- Tap **User login** in the main menu
- Select the user in the drop-down list
- Tap the **Password** input field
- Enter the user's password

User	Default password	Target group
OEM	oem	Commissioner, machine tool builder
Setup	setup	Setup engineer, system configurer
Operator	operator	Operator

Further information: "Logging in for Quick Start", Page 153

> If the password does not match the default password, ask a **Setup** user or **OEM** user for the assigned password.
>
> If the password is no longer known, contact a HEIDENHAIN service agency.

- Confirm entry with **RET**

- Tap **Log in**
- > The user is logged in and the **Manual operation** menu is displayed

Further information: "Target groups according to user types", Page 22

6.5.2 User logout

- Tap **User login** in the main menu

- Tap **Log out**
- > The user is logged out
- > All functions of the main menu are inactive, except for **Switch off**
- > The product can only be used again after a user has logged in

6.6 Setting the language

The user interface language is English. You can change to another language, if desired.

- Tap **Settings** in the main menu

- Tap **User**
- The logged-in user is indicated by a check mark
- Select the logged-in user
- The language selected for the user is indicated by a national flag in the **Language** drop-down list
- Select the flag for the desired language from the **Language** drop-down list
- The user interface is displayed in the selected language

6.7 Performing the reference mark search after startup

> If the reference mark search after unit start is active, then all of the unit's functions will be disabled until the reference mark search has been successfully completed.
>
> **Further information:** "Reference marks (Encoder)", Page 259

> The reference mark search does not need to be performed for serial encoders with EnDat interface, because the axes are automatically homed.

If the reference mark search is active on the unit, then a wizard will ask you to traverse the reference marks of the axes.

- After logging in, follow the instructions of the wizard
- The Reference symbol stops blinking upon successful completion of the reference mark search

Further information: "Operating elements of the position display", Page 78

Further information: "Activating the reference mark search", Page 114

6.8 User interface

> The unit is available in different versions, which are variously equipped. The user interface and available functions may vary depending on the version.

6.8.1 User interface after switch-on

Factory default user interface

The figure shows the user interface in the product's factory default setting.

This user interface will also be displayed after the product has been reset to its factory default setting.

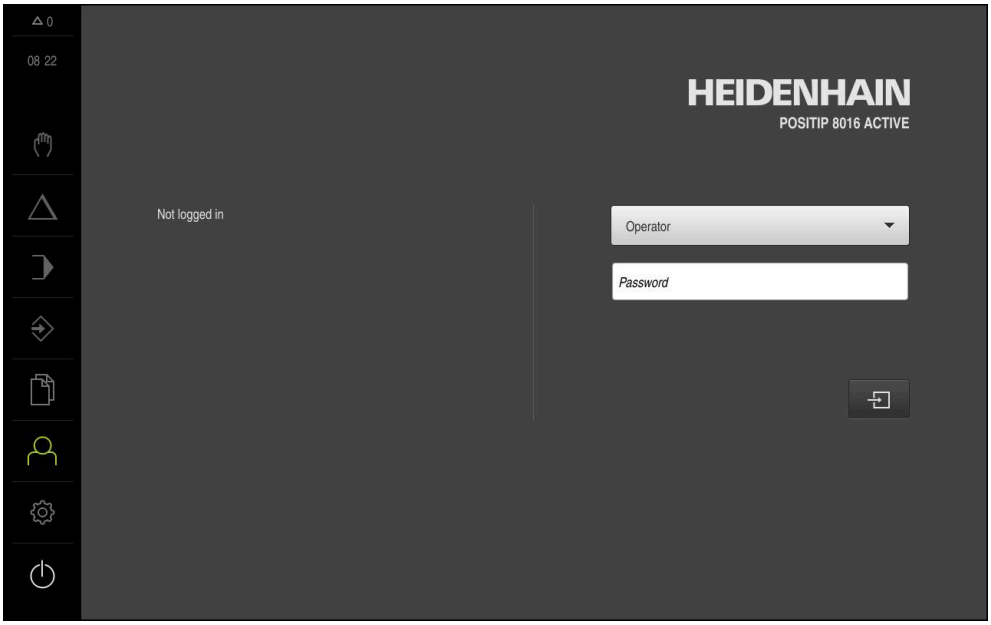

Figure 13: The user interface in the product’s factory default setting

User interface after start-up

If automatic user login is activated, and the last user who logged in was of the **Operator** type, then the product displays the **Manual operation** menu after starting up.

Further information: "Manual operation menu", Page 69

If automatic user login is not activated, then the product opens the **User login** menu.

Further information: "User login menu", Page 76

6.8.2 Main menu of the user interface

User interface (in Manual operation mode)

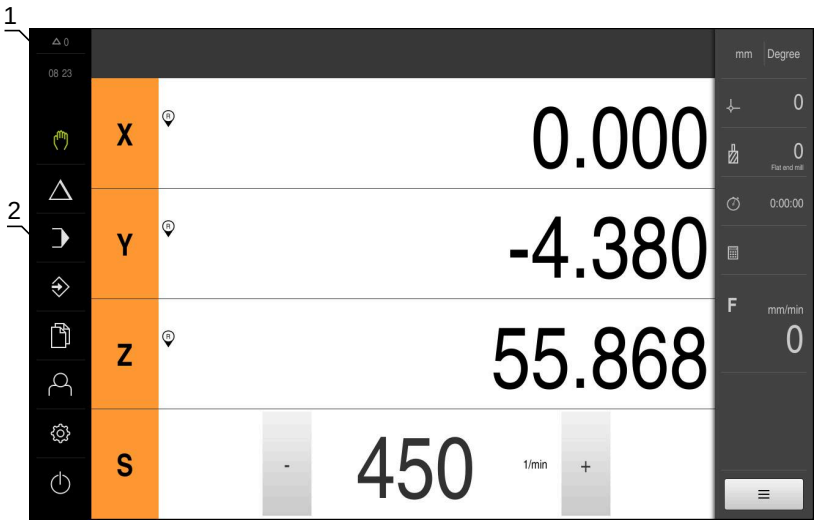

Figure 14: User interface (in Manual operation mode)

1 Message display area, displays the time and the number of unclosed messages
2 Main menu with operating elements

Main menu operating elements

Operating element	Function
△3	**Message** Display of an overview of all messages as well as the number of messages that have not been closed **Further information:** "Messages", Page 85
	Manual operation Manual positioning of machine axes **Further information:** "Manual operation menu", Page 69
	MDI mode Direct input of the desired axis movements (Manual Data Input); the distance to go is calculated and displayed **Further information:** "MDI menu", Page 70
	Program run Execution of a previously created program with user interface **Further information:** "Program run menu ", Page 72
	Programming Creation and management of individual programs **Further information:** "Programming menu ", Page 73

Operating element	Function
	File management Management of the files that are available on the product **Further information:** "File management menu", Page 75
	User login Login and logout of the user **Further information:** "User login menu", Page 76 If a user with additional permissions (Setup or OEM user type) is logged in, then the gear symbols appears.
	Settings Settings of the product, such as setting up users, configuring sensors, or updating the firmware **Further information:** "Settings menu ", Page 77
	Switch-off Shutdown of the operating system or activation of power-saving mode **Further information:** "Switch-off menu", Page 78

6.8.3 Manual operation menu

Activation

- Tap **Manual operation** in the main menu
- > The user interface for manual operation is displayed

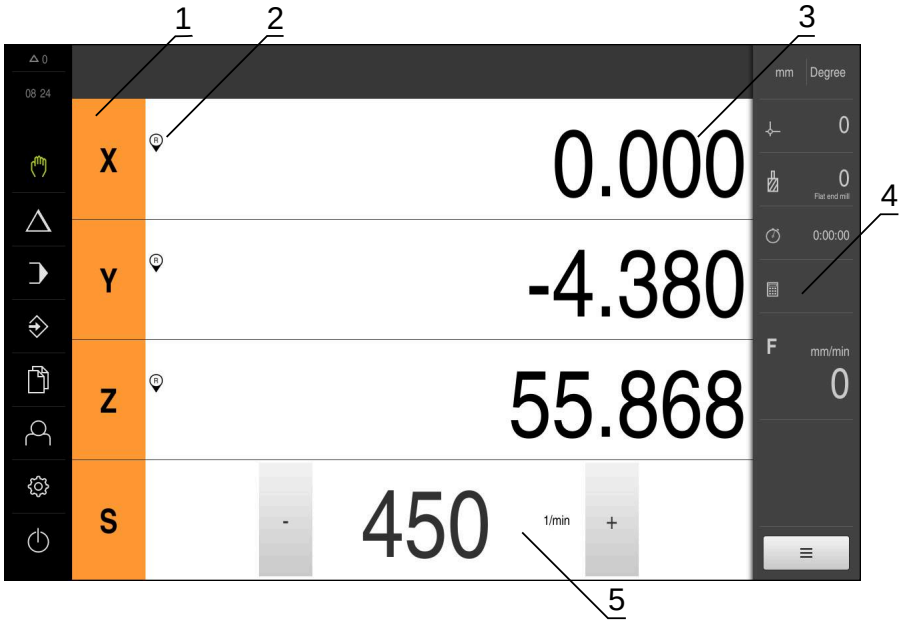

Figure 15: **Manual operation** menu

1 Axis key
2 Reference
3 Position display
4 Status bar
5 Spindle speed (machine tool)

In the **Manual operation** menu, the workspace shows the position values measured at the machine axes.

The status bar provides auxiliary functions.

Further information: "Manual operation", Page 169

6.8.4 MDI menu

Activation

- Tap **MDI** in the main menu
- The user interface for MDI mode is displayed

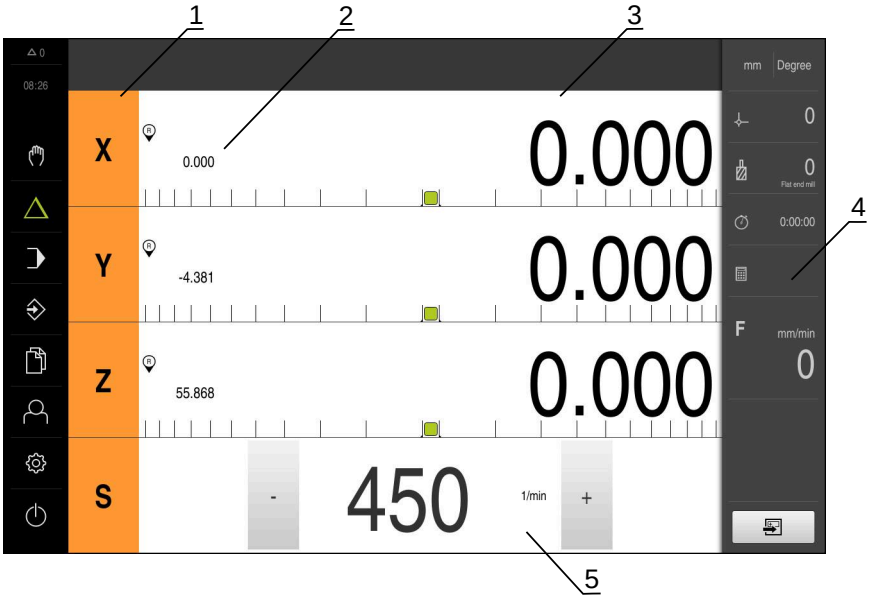

Figure 16: **MDI** menu

1 Axis key
2 Actual position
3 Distance-to-go
4 Status bar
5 Spindle speed (machine tool)

MDI block dialog box

- Tap **MDI** in the main menu

- Tap **Create** on the status bar
- > The user interface for MDI mode is displayed

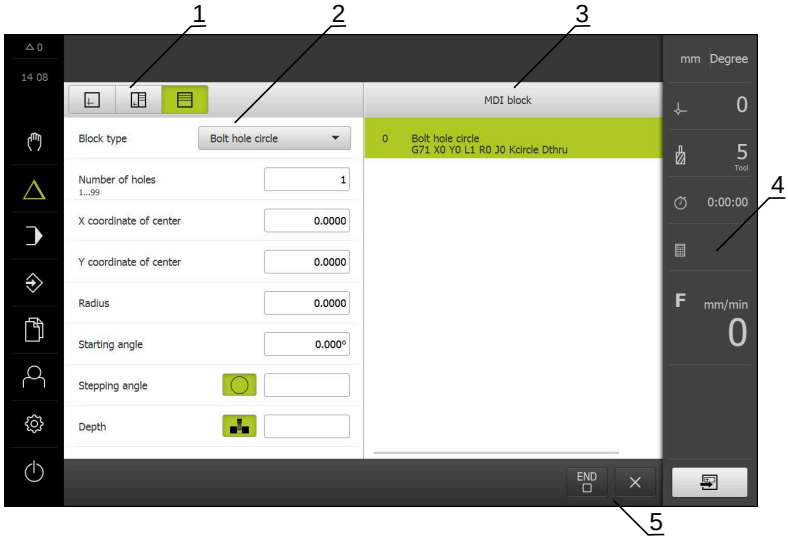

Figure 17: **MDI block** dialog box

1 View bar
2 Block parameters
3 MDI block
4 Status bar
5 Block tools

The **MDI** (Manual Data Input) menu enables you to enter the desired axis movements directly. You specify the distance to the target point, and the distance to go is then calculated and displayed.

The status bar provides additional measured values and functions.

Further information: "MDI mode", Page 183

6.8.5 Program run menu

Calling up

- Tap **Program run** in the main menu
- The user interface for Program Run is displayed

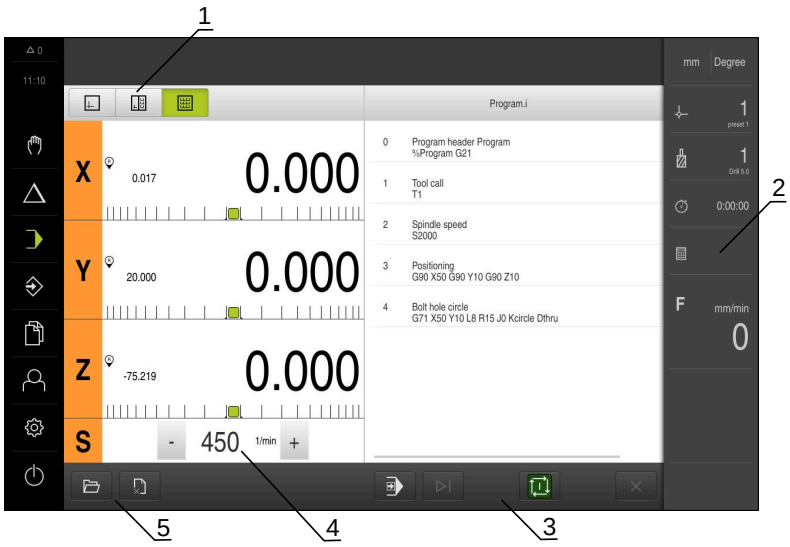

Figure 18: **Program run** menu

1 View bar
2 Status bar
3 Program control
4 Spindle speed (machine tool)
5 Program management

The **Program run** menu makes it possible to execute a program that has previously been created in the Programming operating mode. During execution, a wizard will guide you through the individual program steps.

In the **Program run** menu, you can display a simulation window that visualizes the selected block.

The status bar provides additional measured values and functions.

Further information: "Program run", Page 197

6.8.6 Programming menu

Calling up

- Tap **Programming** in the main menu
- The user interface for programming is displayed

> The status bar and the optional OEM bar are not available in the **Programming** menu.

Figure 19: **Programming** menu

1 View bar
2 Toolbar
3 Program management

You can see a visualization of the selected block in the optional simulation window.

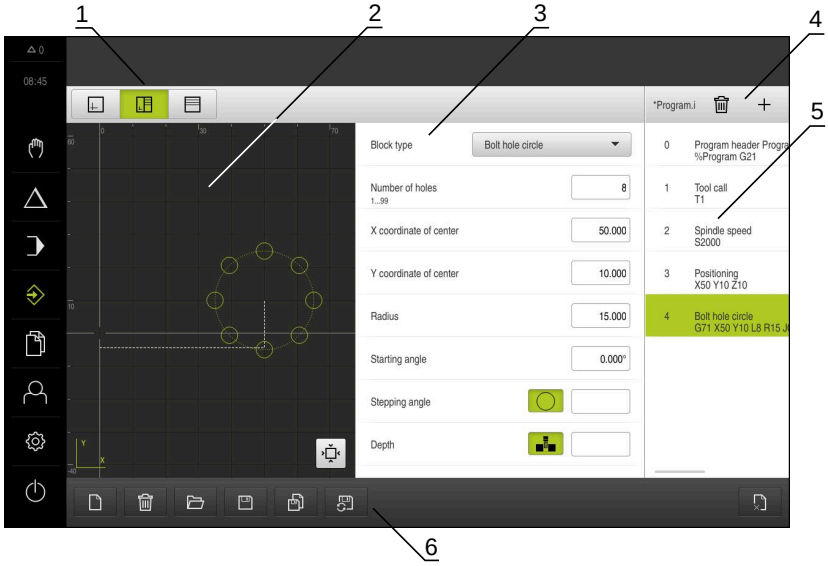

Figure 20: **Programming** menu with opened simulation window

1 View bar
2 Simulation window (optional)
3 Block parameters
4 Toolbar
5 Program blocks
6 Program management

In the **Programming** menu, you can create and manage programs. You define individual machining steps or machining patterns as blocks. A sequence of blocks then forms a program.

Further information: "Programming", Page 205

6.8.7 File management menu

Calling up

- Tap **File management** in the main menu
- > The file management user interface is displayed

Short description

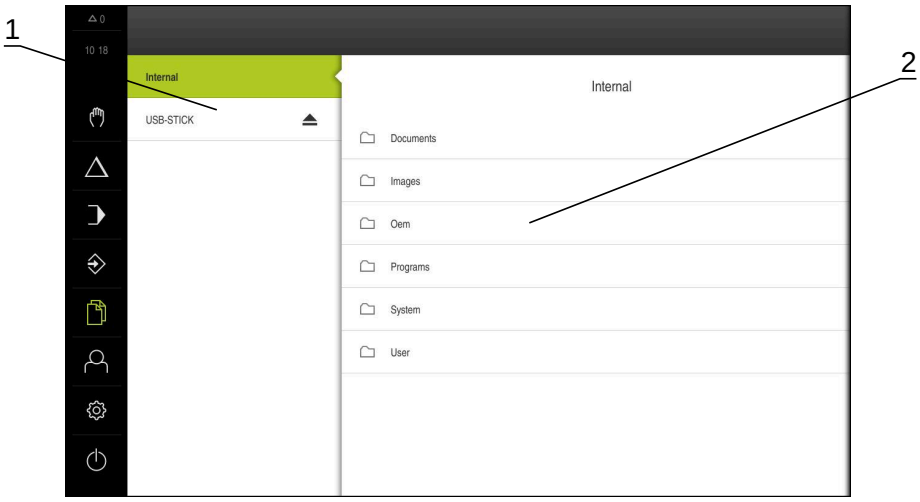

Figure 21: **File management** menu

1 List of available storage locations
2 List of folders in the selected storage location

The **File management** menu shows an overview of the files stored in the product's memory.

Any connected USB mass storage devices (FAT32 format) or available network drives are shown in the list of storage locations. The USB mass storage devices and the network drives are displayed with their name or drive designation.

Further information: "File management", Page 221

6.8.8 User login menu

Calling up

- Tap **User login** in the main menu
- > The user interface for user login and logout is displayed

Short description

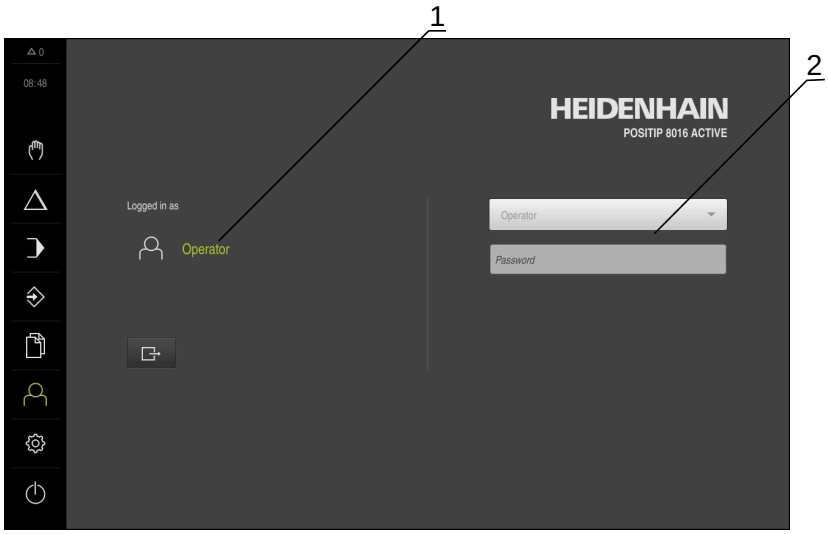

Figure 22: **User login** menu

1 Display of the logged-in user
2 User login

The **User login** menu shows the logged-in user in the column on the left. The login of a new user is displayed in the right-hand column.

To log in another user, the logged-in user must first log out.

Further information: "User login and logout", Page 63

6.8.9 Settings menu

Calling up

- Tap **Settings** in the main menu
- The user interface for the product settings is displayed

Short description

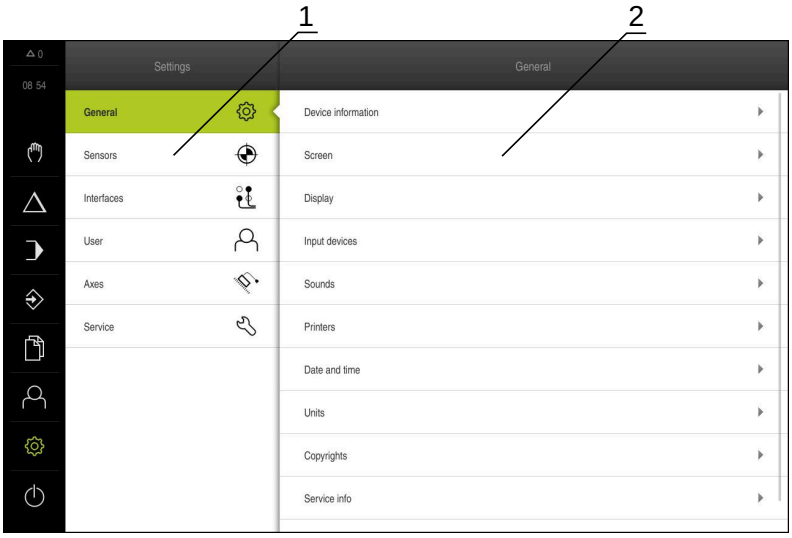

Figure 23: **Settings** menu

1 List of setting options
2 List of setting parameters

The **Settings** menu shows all of the options for configuring the product. With the setting parameters, you can adapt the product to on-site requirements.

Further information: "Settings", Page 229

> The product provides various authorization levels that grant the user full or restricted access to management and operation functionality.

6.8.10 Switch-off menu

Calling up

- Tap **Switch off** in the main menu
- > The operating elements for shutting down the operating system, for activating the energy-saving mode and for activating the cleaning mode are displayed

Short description

The **Switch off** menu provides the following options:

Operating element	Function
	**Shut down** Shuts down the operating system
	**Energy saving mode** Switches the screen off and puts the operating system into energy-saving mode
	**Cleaning mode** Switches the screen off; the operating system continues unchanged

Further information: "POSITIP 8000 – switch-on and switch-off", Page 62

Further information: "Cleaning the screen", Page 292

6.9 Position display

The unit's position display shows the axis positions and additional information about the configured axes (if applicable).

6.9.1 Operating elements of the position display

Symbol	Meaning
	Axis key **Axis key functions:** ■ Tapping the axis key: opens the input field for position value (Manual operation) or dialog box **MDI block** (MDI mode) ■ Holding down the axis key: sets the current position as zero point ■ Dragging the axis key to the right: opens menu if functions are available for the axis
	Reference mark search performed successfully
	Reference mark search not performed or no reference mark detected
	Selected gear stage of the gear spindle **Further information:** "Setting the gear stage for gear spindles", Page 80

Symbol	Meaning
	Spindle speed cannot be achieved with selected gear stage ▶ Select a higher gear stage
	Spindle speed cannot be achieved with selected gear stage ▶ Select a lower gear stage
	In MDI mode and Program Run , a scaling factor is applied to the axis **Further information:** "Adjusting settings in the quick access menu", Page 81
	Axis is feedback-controlled
1250	Actual spindle speed
- 1250 +	Input field for controlling the spindle speed **Further information:** "Setting the spindle speed", Page 79

6.9.2 Position display functions

Setting the spindle speed

You can control the spindle speed depending on the configuration of the connected machine tool.

- ▶ To switch from the display of the spindle speed to the input field (if required), drag the display to the right.
- > The **Spindle speed** input field is displayed
- ▶ Tap or long-press **+** or **-** to set the spindle speed to the desired value

or

- ▶ Tap the **Spindle speed** input field
- ▶ Enter the desired value
- ▶ Confirm entry with **RET**
- > The product applies the entered spindle speed as the nominal value and controls the spindle of the machine tool accordingly
- ▶ To return to the display of the spindle speed, drag the input field to the left

> If no entry is made in the **spindle speed** input field for three seconds, the device switches back to the display of the current spindle speed.

Setting the gear stage for gear spindles

If your machine tool uses a gear spindle, then you can select the gear stage used.

> The selection of the gear stages can also be controlled via an external signal.
>
> **Further information:** "Spindle axis S", Page 270

- In the working space, drag the **S axis key** to the right
- Tap **Gear stage**
- > The **Set gear stage** dialog appears
- Tap the desired gear stage
- Tap **Confirm**
- > The selected gear stage is now adopted as the new value
- Drag the **S axis key** to the left
- > The icon for the selected gear stage appears next to the **S axis key**

> If the desired spindle speed cannot be attained with the selected gear stage, then the gear stage icon will flash with an upward pointing arrow (higher gear stage) or with a downward pointing arrow (lower gear stage).

6.10 Status bar

> The status bar and the optional OEM bar are not available in the **Programming** menu.

In the status bar, the product shows the feed rate and traversing speed. The operating elements of the status bar also give you direct access to the preset table and tool table, as well as to the stopwatch and calculator features.

6.10.1 Operating elements of the status bar

The status bar provides the following operating elements:

Operating element	Function
mm Degree	**Quick access menu** Setting of the units for linear values and angular values, configuration of a scaling factor; tapping opens the quick access menu **Further information:** "Adjusting settings in the quick access menu", Page 81
	Preset table Display of the current preset; tapping opens the preset table **Further information:** "Creating a preset table", Page 145

Operating element	Function
	**Tool table** Display of the current tool; tapping opens the tool table **Further information:** "Creating a tool table", Page 143
	**Stopwatch** Time display with Start / Stop function in h:mm:ss format **Further information:** "Stopwatch", Page 82
	**Calculator** Calculator with the most important mathematical functions and speed calculator **Further information:** "Calculator", Page 83
	**Feed rate** Display of the current feed rate of the fastest linear axis If all linear axes are at a standstill, the feed rate of the fastest rotational axis is shown The feed-rate value can be set in the **Manual operation** and **MDI** operating modes; tapping it opens the feed-rate menu
	**Override** Display of the changed traversing speed of the fastest linear axis. If all linear axes are at a standstill, the changed traversing speed of the fastest rotational axis is displayed The change is made using an external controller on an NC-controlled machine tool
	**Auxiliary functions** Auxiliary functions in Manual operation mode **Further information:** "Additional functions in Manual operation mode", Page 83
	**MDI block** For creating machining blocks in MDI mode

6.10.2 Adjusting settings in the quick access menu

With the quick access menu, you can adjust the following settings:

> The availability of settings in the quick access menu depends on the which user is logged in.

- Unit for linear values (**Millimeters** or **Inch**)
- Unit for angular values (**Radian**, **Decimal degrees** or **Deg-Min-Sec**)
- The **Scaling factor** by which the stored position is multiplied during execution of an **MDI block** or **program block**
- Feed-rate value for axes in the **Manual operation** and **MDI** operating modes

Setting units

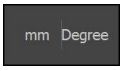

- Tap the **quick access menu** on the status bar
- Select the desired **Unit for linear values**
- Select the desired **Unit for angular values**

- Tap **Close** to close the quick access menu
- > The selected units are displayed in the **quick access menu**

Activating Scaling factor

While an **MDI block** or a **program block** is executing, the position stored in the block is multiplied by the **Scaling factor**. This allows you to mirror or scale an **MDI block** or **program block** on one or more axes, without changing the block.

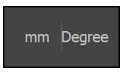

- Tap the **quick access menu** on the status bar
- To navigate to the desired setting, drag the view to the left
- Activate **Scaling factor** with the **ON/OFF** slide switch
- Enter the desired **Scaling factor** for each axis
- Confirm each entry with **RET**

- To close the quick access menu, tap **Close**

- > For an active scaling factor ≠ 1, the corresponding symbol appears in the position display

6.10.3 Stopwatch

The status bar provides a stopwatch for measuring the machining times, etc. The stopwatch uses the time display format h:mm:ss and operates on the same principle as a standard stopwatch, i.e. it measures elapsed time.

Operating element	Function
	**Start** Starts time measurement or resumes time measurement after **Pause**
	**Pause** Interrupts time measurement
	**Stop** Stops time measurement and resets it to 0:00:00

6.10.4 Calculator

For calculations, the product provides various calculators in the status bar. To enter the numerical values, use the numeric keys as on a normal computer.

Calculator	Function
Standard	Contains the most important mathematical functions
Speed calculator	▶ Enter the **Diameter** (mm) and **Cutting speed** (m/min) in the provided fields > The speed is calculated automatically

6.10.5 Setting the feed-rate value

Setting the feed-rate value

For the **Manual mode** and **MDI mode**, you can set the feed-rate value in the **Feed rate** dialog

- ▶ Tap **Feed rate** on the status bar
- > The **Feed rate** dialog box appears
- ▶ Enter the feed-rate value in the corresponding input field
  - For linear axes, use the **mm/min** input field
  - For rotational axes, use the **°/min** input field

- ▶ Tap **Close** to close the dialog
- > The axes are moved at the entered feed-rate value

6.10.6 Additional functions in Manual operation mode

- ▶ To call the additional functions, tap **Additional functions** in the status bar

The following operating elements are available:

Operating element	Function
	**Reference marks** For starting the reference mark search **Further information:** "Activating the reference mark search", Page 114
	**Probing** For probing the edge of a workpiece **Further information:** "Defining presets", Page 172
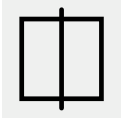	**Probing** For finding the centerline of a workpiece **Further information:** "Defining presets", Page 172
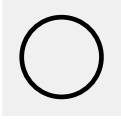	**Probing** For finding the center point of a circular feature (hole or cylinder) **Further information:** "Defining presets", Page 172

6.11 OEM bar

> The status bar and the optional OEM bar are not available in the **Programming** menu.

The optional OEM bar allows you to control the configuration of the functions of the connected machine tool, independently of its configuration.

6.11.1 Operating elements of the OEM bar

> The operating elements that are available on the OEM bar depend on the configuration of the device and of the connected machine tool.
>
> **Further information:** "Configuring the OEM bar", Page 118

The following operating elements are typically available in the **OEM bar**:

Operating element	Function
	**Logo** Displays the configured OEM logo
	**Spindle speed** Shows one or more default values for the spindle speed **Further information:** "Configuring nominal values for the spindle speed", Page 119

6.11.2 Calling functions of the OEM bar

> The operating elements that are available on the OEM bar depend on the configuration of the device and of the connected machine tool.
>
> **Further information:** "Configuring the OEM bar", Page 118

The operating elements in the OEM bar allow you to control special functions (e.g., spindle functions).

Further information: "Configuring special functions", Page 121

Setting spindle speed

- Tap the **Spindle speed** field on the OEM bar
- > The product applies the predefined voltage value at which the spindle of the connected machine tool is brought to the selected rotational speed (with no load on the spindle)

Programming spindle speed

- Tap or long-press **+** or **-** to bring the spindle to the desired rotational speed

- Press and hold the desired **Spindle speed** field on the OEM bar
- > The background color of the field is highlighted in green
- > The product applies the current spindle speed as the nominal value and displays it in the **Spindle speed** field

6.12 Messages and audio feedback

6.12.1 Messages

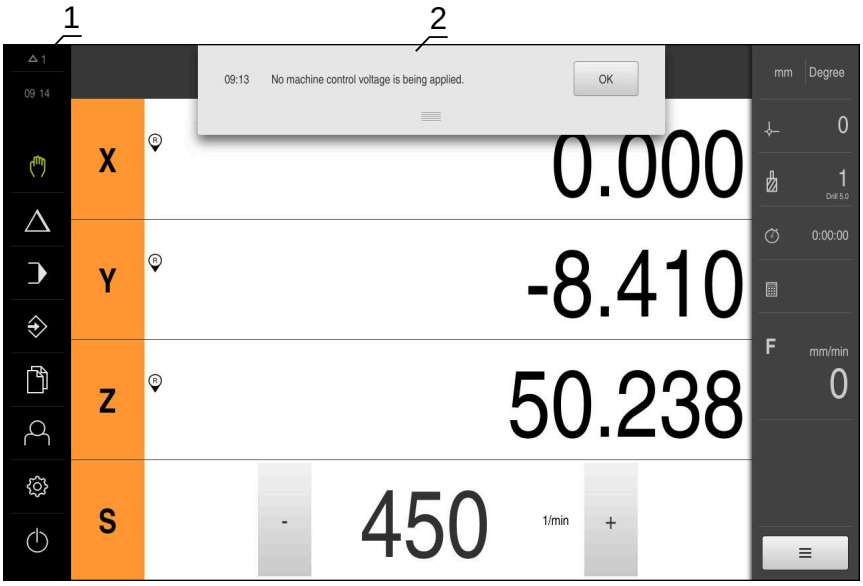

Figure 24: Display of messages in the workspace

1 Message display area
2 Message list

The messages that appear at the top of the workspace are triggered by, for example, operator errors or uncompleted processes.

The messages are displayed upon occurrence of the message cause or via tapping on the **Messages** display area at the top left of the screen.

Viewing messages

- Tap **Messages**
- > The message list opens

Resizing the display area

- To enlarge the message display area, drag the **handle** down
- To make the message display area smaller, drag the **handle** up
- To close the display area, drag the **handle** up out of the screen
- > The number of unclosed messages is indicated in **Messages**

Closing messages

Depending on the content of the messages, you can close messages by means of the following operating elements:

- ▶ To close an informational message, tap **Close**
- > The message disappears

or

- ▶ To close a message that potentially has an effect on the application, tap **OK**
- > If applicable, the message will now be taken into account by the application
- > The message disappears

6.12.2 Wizard

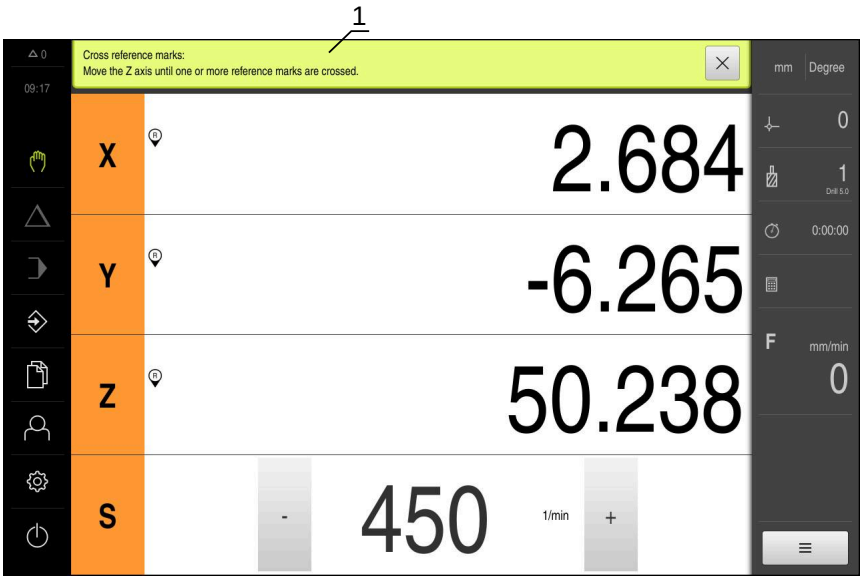

Figure 25: Support from the wizard for action steps

1 Wizard (example)

The wizard assists you in carrying out action steps, programs, or teach processes.

The following operating elements of the wizard are shown based on the action step or process.

- ▶ To return to the last action step or to repeat the process, tap **Undo**

- ▶ To confirm the displayed action step, tap **Confirm**
- > The wizard proceeds to the next step or completes the process

- ▶ Tap **Next** to proceed to the next step
- ▶ Tap **Back** to return to the previous step

- ▶ Tap **Close** to close the wizard

6.12.3 Audio feedback

The product can provide audio feedback to indicate user actions, completed processes or malfunctions.

The available sounds are grouped into categories. The sounds differ within a category.

You can define the audio feedback settings in the **Settings** menu.

Further information: "Sounds", Page 235

7

Commissioning

7.1 Overview

This chapter contains all the information necessary for commissioning the product.

During commissioning, the machine manufacturer's commissioning engineer (**OEM**) configures the product for use on the specific machine tool.

The settings can be reset to the factory defaults.

Further information: "Reset", Page 280

> Make sure that you have read and understood the "Basic operation" chapter before carrying out the actions described below.
>
> **Further information:** "Basic operation", Page 57

> The following steps must be performed only by qualified personnel.
>
> **Further information:** "Personnel qualification", Page 29

7.2 Logging in for commissioning

7.2.1 User login

To commission the product, the **OEM** user must log in.

- Tap **User login** in the main menu
- If required, log out the user who is currently logged in
- Select the **OEM** user
- Tap the **Password** input field
- Enter the password "**oem**"

> If the password does not match the default password, ask a **Setup** user or **OEM** user for the assigned password.
>
> If the password is no longer known, contact a HEIDENHAIN service agency.

- Confirm the entry with **RET**

- Tap **Log in**
- > The user is logged in
- > The product opens the **Manual operation** mode

7.2.2 Performing the reference mark search after startup

> If the reference mark search after unit start is active, then all of the unit's functions will be disabled until the reference mark search has been successfully completed.
>
> **Further information:** "Reference marks (Encoder)", Page 259

> The reference mark search does not need to be performed for serial encoders with EnDat interface, because the axes are automatically homed.

If the reference mark search is active on the unit, then a wizard will ask you to traverse the reference marks of the axes.

- ▶ After logging in, follow the instructions of the wizard
- > The Reference symbol stops blinking upon successful completion of the reference mark search

Further information: "Operating elements of the position display", Page 78

Further information: "Activating the reference mark search", Page 114

7.2.3 Setting the language

The user interface language is English. You can change to another language, if desired.

- ▶ Tap **Settings** in the main menu

- ▶ Tap **User**
- > The logged-in user is indicated by a check mark
- ▶ Select the logged-in user
- > The language selected for the user is indicated by a national flag in the **Language** drop-down list
- ▶ Select the flag for the desired language from the **Language** drop-down list
- > The user interface is displayed in the selected language

7.2.4 Changing the password

You must change the password to prevent unauthorized configuration.
The password is confidential and must not be disclosed to any other person.

- Tap **Settings** in the main menu

- Tap **User**
- > The logged-in user is indicated by a check mark
- Select the logged-in user
- Tap **Password**
- Enter the current password
- Confirm entry with **RET**
- Enter the new password and repeat it
- Confirm entry with **RET**
- Tap **OK**
- Close the message with **OK**
- > The new password is available the next time the user logs in

7.3 Steps for commissioning

The following commissioning steps build on each other.
- To correctly commission the product, make sure to perform the steps in the order described here

Prerequisite: You are logged on as a user of the **OEM** type (see "Logging in for commissioning", Page 90).

Select the application

- Selecting the Application

Basic settings

- Activating the Software options
- Setting the date and time
- Setting the units of measure

Configuring a touch probe

- Configuring a touch probe

Configuring the axes

For EnDat interfaces:

- Configuring axes for encoders with EnDat interface
- Performing error compensation
- Ascertaining the line count per revolution

For 1 V_{PP} or 11 μA_{PP} interfaces:

- Activating the reference mark search
- Configuring the axes for encoders with a 1 V_{PP} or 11 μA_{PP} interface
- Performing error compensation
- Ascertaining the line count per revolution

- Configuring the spindle axis
- Configuring Axis+ NC
- Coupling axes

Configuring M functions

- Standard M functions
- Manufacturer-specific M functions

OEM area

- Adding documentation
- Adding a startup screen
- Configuring the OEM bar
- Adjusting the display
- Defining error messages
- Back-up OEM-specific folders and files
- Configuring the unit for screenshots

Backing up data

- Back up settings
- Back up user files

NOTICE

Loss of or damage to configuration data!

If the product is disconnected from the power source while it is on, the configuration data can be lost or corrupted.

▶ Back up the configuration data and keep the backup for recovery purposes

7.4 Selecting the Application

When putting the product into service, you can choose between the standard application modes of **Milling** and **Turning**.

In its factory default setting, the product is already set to the **Milling** application mode.

> Separate shaft instructions are available for the **Turning** application mode.
> You can find the instructions on the HEIDENHAIN website at **www.heidenhain.de/documentation**

> When you change the unit's application mode, then all of the axis settings will be reset.

- Tap **Settings** in the main menu

- Tap **Service**
- Open in the sequence
  - **OEM area**
  - **Settings**

7.5 Basic settings

7.5.1 Activating the Software options

Additional **Software options** can be enabled on the product via a **License key**.

> You can view the enabled **Software options** on the overview page.
> **Further information:** "Checking the Software options", Page 96

Requesting license key

You can request a license key by using the following procedure:

- Reading out device information for the license key request
- Creating a license key request

Reading out device information for the license key request

- Tap **Settings** in the main menu

- Tap **General**
- Tap **Device information**
- > An overview of the device information appears
- > The product designation, ID number, serial number, and firmware version are displayed
- Contact a HEIDENHAIN service agency and submit the displayed device information in order to request a license key for the product
- > The license key and the license file are generated and sent by e-mail

Creating a license key request

- Tap **Settings** in the main menu

- Tap **Service**
- Tap **Software options**
- To request a software option that is available for a fee, tap **Request options**
- To request a free trial option, tap **Request trial options**
- To select the desired software option, tap its check mark

> To deselect an entry, tap the check mark for the respective software option

- Tap **Creating a request**
- In the dialog, select the storage location in which you want to save the license key request
- Enter a suitable file name
- Confirm entry with **RET**
- Tap **Save as**
- > The license key request is created and saved in the selected folder
- If the license key request is stored on the unit, move the file to a connected USB mass storage device (FAT32 format) or to the network drive
  Further information: "Moving a file", Page 224
- Contact a HEIDENHAIN service agency and submit the file you created in order to request a license key for the product
- > The license key and the license file are generated and sent by e-mail

Activating a license key

You can activate a license key by

- Reading the license key from the provided license file into the product
- Entering the license key manually into the product

Uploading license key from license file

- Tap **Settings** in the main menu

- Tap **Service**
- Open in succession:
  - **Software options**
  - **Activate options**
- Tap **Read license file**
- Select the license file in the file system, on the USB mass storage device or on the network drive
- Confirm your selection with **Select**
- Tap **OK**
> The license key is activated
- Tap **OK**
> You may need to restart the product, depending on the software option
- Confirm the restart with **OK**
> The activated software option is available

Entering license key manually

- Tap **Settings** in the main menu

- Tap **Service**
- Open in succession:
  - **Software options**
  - **Activate options**
- Enter the license key into the **License key** input field
- Confirm the entry with **RET**
- Tap **OK**
> The license key is activated
- Tap **OK**
> You may need to restart the product, depending on the software option
- Confirm the restart with **OK**
> The activated software option is available

Checking the Software options

On the overview page, you can check which **Software options** are enabled for the product.

- Tap **Settings** in the main menu

- Tap **Service**
- Open in succession:
  - **Software options**
  - **Overview**
> A list of enabled **Software options** is displayed

7.5.2 Setting the date and time

- Tap **Settings** in the main menu

- Tap **General**
- Tap **Date and time**
- > The set values are displayed in the following format: Year, month, day, hour, minute
- To set the date and time in the middle line, drag the columns up or down
- Tap **Set** to confirm
- Select the desired format from the **Date format** list:
  - MM-DD-YYYY: Display as month, day, year
  - DD-MM-YYYY: Display as day, month, year
  - YYYY-MM-DD: Display as year, month, day

Further information: "Date and time", Page 236

7.5.3 Setting the units of measure

You can set various parameters to define the units of measure, rounding methods and decimal places.

- Tap **Settings** in the main menu

- Tap **General**
- Tap **Units**
- To set a unit of measure, tap the corresponding drop-down list and select the unit
- To set the rounding method, tap the corresponding drop-down list and select the rounding method
- To set the number of decimal places displayed, tap **-** or **+**

Further information: "Units", Page 236

7.6 Configuring a touch probe

You can use probing functions to set presets with a HEIDENHAIN KT 130 Edge Finder. The stylus of the edge finder can be additionally fitted with a ruby ball tip.

The diameter of the KT 130 edge finder will automatically be set when the touch probe is activated.

- Tap **Settings** in the main menu

- Tap **Sensors**
- Tap **Touch probe**
- Use the **ON/OFF** sliding switch to activate or deactivate the touch probe
- Use the slide switch **ON/OFF** to activate or deactivate the **Always use touch probe for probing** option as needed
- Enter the length difference of the touch probe in the **Length** input field
- Confirm the entry with **RET**
- Use the **ON/OFF** slide switch to activate or deactivate the **Evaluation of the ready signal** option as needed

7.7 Configuring the axes

The procedure varies depending on the interface type of the connected encoder and on the type of axis:

- Encoders with EnDat interface:
  The encoder applies the parameters automatically

  Further information: "Configuring axes for encoders with EnDat interface", Page 100
- Encoders with 1 V_{pp} or 11 μA_{pp} interface:
  The parameters must be configured manually
- **Spindle**, **Gear spindle**, and **Spindle with orientation** axis type
  The inputs, outputs, and additional parameters must be configured manually

  Further information: "Spindle axis S", Page 270
- **Axis + NC**, **Electronic handwheel** (software option) axis type: The inputs, outputs, and additional parameters must be configured manually

  Further information: "<Axis name> (settings of the axis)", Page 253

For the parameters of HEIDENHAIN encoders that are typically connected to the product, refer to the overview of typical encoders.

Further information: "Overview of typical encoders", Page 99

7.7.1 Overview of typical encoders

The following overview lists the parameters of the HEIDENHAIN encoders that are typically connected to the product.

> When connecting other encoders, refer to the encoder's documentation for the required parameters.

Linear encoders

Examples of incremental encoders that are typically used

Encoder series	Interface	Signal period	Reference mark	Maximum traverse path
LS 388C/688C	1 V_{PP}	20 µm	Coded	20 mm
LS 187/487C	1 V_{PP}	20 µm	Coded	20 mm
LB 382C	1 V_{PP}	40 µm	Coded	80 mm

Examples of absolute encoders that are typically used

Encoder series	Interface	Measuring step
LC 415	EnDat 2.2	5 nm

Angle encoders and rotary encoders

Encoder series	Interface	Line count/ output signals per revolution	Reference mark	Nominal increment
RON 285C	1 V_{PP}	18000	Coded	20°
ROD 280C	1 V_{PP}	18000	Coded	20°
ROD 480	1 V_{PP}	1000 ... 5000	One	-
ERN 180	1 V_{PP}	1000 ... 5000	One	-
ERN 480	1 V_{PP}	1000 ... 5000	One	-

> The formulae below enable you to calculate the nominal increment of the distance-coded reference marks with angle encoders:
>
> Nominal increment = 360° ÷ number of reference marks × 2
>
> Nominal increment = (360° × nominal increment in signal periods) ÷ line count

Examples of absolute encoders that are typically used

Encoder series	Interface	Measuring step
ROC 425	EnDat 2.2	25 bits
RCN 5310	EnDat 2.2	26 bits

7.7.2 Configuring axes for encoders with EnDat interface

If the corresponding encoder input has already been assigned to an axis, a connected encoder with EnDat interface is automatically detected upon restart, and the settings are adapted. Alternatively, you can assign the encoder input after you have connected the encoder.

Prerequisite: An encoder with EnDat interface is connected to the product.

> The configuration procedure is the same for each axis. The procedure will now be explained using one axis as an example.

- Tap **Settings** in the main menu

- Tap **Axes**
- Tap the axis name or **Not defined**, if applicable
- If applicable, select the axis name for the axis in the **Axis name** drop-down list
- Tap **Encoder**
- Select the connection for the corresponding encoder from the **Encoder input** drop-down list:
  - X1
  - X2
  - X3
  - X4
  - X5
  - X6
- > The available encoder information is transmitted to the product
- > The settings are updated
- Select the encoder model from the **Encoder model** drop-down list:
  - **Linear encoder**
  - **Angle encoder**
  - **Angle encoder as linear encoder**
- If you selected **Angle encoder as linear encoder**, then enter the **Mechanical ratio**
- If you selected **Angle encoder**, specify the **Display mode**
- Tap **Reference point displacement**
- Use the **ON/OFF** slide switch to activate or deactivate **Reference point displacement** (calculation of the offset between the reference mark and the machine zero point)
- If activated, enter the offset value for **Reference point displacement**
- Confirm the entry with **RET**

or

- To apply the current position as the offset value, tap **Apply** under **Current position for reference point shift**

- To switch to the previous display, tap **Back**
- To view the electronic ID label of the encoder, tap **ID label**
- In order to see the results of the encoder diagnosis, tap **Diagnosis**

Further information: "<Axis name> (settings of the axis)", Page 253

7.7.3 Configuring the axes for encoders with a 1 V_{PP} or 11 μA_{PP} interface

> The configuration procedure is the same for each axis. The procedure will now be explained using one axis as an example.

- Tap **Settings** in the main menu

- Tap **Axes**
- Tap the axis name or **Not defined**, if applicable
- If applicable, select the axis name for the axis in the **Axis name** drop-down list
- Tap **Axis type**
- Select the **Axis type Axis**
- In order to switch to the previous axis, tap **Back**
- Tap **Encoder**
- Select the connection for the corresponding encoder from the **Encoder input** drop-down list:
  - **X1**
  - **X2**
  - **X3**
  - **X4**
  - **X5**
  - **X6**
- Select the type of incremental signal from the **Incremental signal** drop-down list:
  - **1 Vpp**: Sinusoidal voltage signal
  - **11 µApp**: Sinusoidal current signal
- Select the encoder model from the **Encoder model** drop-down list:
  - **Linear encoder**: Linear axis
  - **Angle encoder**: Rotary axis
  - **Angle encoder as linear encoder**: A rotary axis is displayed as a linear axis
- Depending on the selection, enter further parameters:
  - For **Linear encoder**, enter the **Signal period** (see " Linear encoders", Page 99)
  - For **Angle encoder**, enter the **Line count** (see "Angle encoders and rotary encoders", Page 99), or determine it using a teach sequence (see "Ascertaining the line count per revolution", Page 104)
  - For an **Angle encoder as linear encoder**, enter the **Line count** and the **Mechanical ratio**
- Confirm each input with **RET**
- For **Angle encoder**, select the **Display mode**, if applicable
- Tap **Reference marks**
- Select the reference mark from the **Reference mark** drop-down list:

- **None**: There is no reference mark
- **One**: The encoder has one reference mark
- **Coded**: The encoder has distance-coded reference marks

▶ If the linear encoder has coded reference marks, enter the **Maximum traverse path**
(see " Linear encoders", Page 99)

▶ If the angle encoder has coded reference marks, enter the parameter for the **Nominal increment** (see "Angle encoders and rotary encoders", Page 99)

▶ Confirm the entry with **RET**

▶ Use the **ON/OFF** slider to activate or deactivate the **Inversion of reference mark pulses** function

▶ Tap **Reference point displacement**

▶ Use the **ON/OFF** slide switch to activate or deactivate **Reference point displacement** (calculation of the offset between the reference mark and the machine zero point)

▶ If activated, enter the offset value for **Reference point displacement**

▶ Confirm the entry with **RET**

▶ To apply the current position as the offset value, tap **Apply** under **Current position for reference point shift**

▶ In order to switch to the previous display, tap **Back** twice

▶ Select the frequency of the low-pass filter for suppressing high-frequency interference signals from the **Analog filter frequency** drop-down list:

- **33 kHz**: Interference frequencies above 33 kHz
- **400 kHz**: Interference frequencies above 400 kHz

▶ Use the **ON/OFF** slider to activate or deactivate the **Terminating resistor** function

> The terminating resistor is automatically deactivated for incremental signals of the current signal type (11 μA_{PP})

▶ Select the type of error monitoring from the **Error monitor** drop-down list:

- **Off**: Error monitoring not active
- **Amplitude**: Error monitoring of the signal amplitude
- **Frequency**: Error monitoring of the signal frequency
- **Frequency & amplitude**: Error monitoring of the signal amplitude and signal frequency

▶ Select the desired counting direction from the **Counting direction** drop-down list:

- **Positive**: The direction of traverse is in the counting direction of the encoder
- **Negative**: The direction of traverse is opposite to the counting direction of the encoder

Further information: "<Axis name> (settings of the axis)", Page 253

Ascertaining the line count per revolution

For angle encoders with interfaces of the type 1 V_{PP} or 11 μA_{PP} you can use a teach sequence to ascertain the exact line count per revolution.

- Tap **Settings** in the main menu

- Tap **Axes**
- Tap the desired axis designation or **Not defined**, if applicable
- If applicable, select the name of the axis from the **Axis name** drop-down list
- Tap **Encoder**
- From the **Encoder model** drop-down list, select **Angle encoder**
- For **Display mode** select the **- ∞ ... ∞** option
- Tap **Reference marks**
- Select one of the following options from the **Reference mark** drop-down list:
  - **None**: There is no reference mark
  - **One**: The encoder has one reference mark
- In order to switch to the previous axis, tap **Back**
- To start the teach sequence, tap **Start**
> The teach sequence is started and the wizard is displayed
- Follow the instructions of the wizard
> The line count determined during the teach sequence is transferred to the **Line count** field

> The ascertained line count remains stored if you select a different display mode after the teach sequence.

Further information: "Settings for encoders with interfaces of the type 1 V_{PP} or 11 A_{PP}", Page 257

7.7.4 Performing error compensation

Mechanical influences such as guideway errors, tilting in the end positions, tolerances of the mounting surface or poor mounting (Abbe error) may lead to measuring errors. Error compensation enables the device to automatically compensate for systematic measuring errors during machining of the workpieces. One or more compensation factors can be defined by comparing nominal and actual values.

A distinction is made between the following methods:

- Linear error compensation (LEC): The compensation factor is calculated based on the specified length of a calibration standard (nominal length) and the actual distance traversed (actual length). The compensation factor is applied linearly to the entire measuring range.
- Segmented linear error compensation (SLEC): The axis is divided into multiple segments with the help of a maximum of 200 supporting points. A distinct compensation factor is defined and applied for every segment.

NOTICE

Subsequent modifications to the encoder settings can result in measuring errors

If encoder settings such as the encoder input, encoder model, signal period, or reference marks are changed, previously determined compensation factors may no longer apply.

- ▶ If you change encoder settings, then you need to reconfigure the error compensation

For all methods, the actual error curve must be exactly measured (e.g., with the help of a comparator measuring device or calibration standard).

Linear error compensation and segmented linear error compensation cannot be combined with each other.

If you enable a reference point shift, then you need to reconfigure the error compensation. This helps you avoid measuring errors.

Configuring linear error compensation (LEC)

With linear error compensation (LEC), the product applies a compensation factor that is calculated from the specified length or angle of a reference standard (nominal length or nominal angle) and the actual traverse path (actual length and actual angle). The compensation factor is applied to the entire measuring range.

- Tap **Settings** in the main menu

- Tap **Axes**
- Select the axis
- Open in succession:
  - **Error compensation**
  - **Linear error compensation (LEC)**
- Enter the length or angle of the reference standard (nominal length or nominal angle)
- Confirm the entry with **RET**
- Enter the length or angle of the actual traverse path determined by measuring (actual length or actual angle)
- Confirm the entry with **RET**
- Activate **Compensation** with the **ON/OFF** slide switch

> You can also use **Linear error compensation (LEC)** for angle encoders if the rotation angle is less than 360°.

Further information: "Linear error compensation (LEC)", Page 263

Configuring segmented linear error compensation (SLEC)

For a segmented linear error compensation (SLEC), you divide the axis into short segments by defining up to 200 supporting points. The deviations between the actual distance traversed and the segment length in the individual segments determine the compensation values that compensate the mechanical influences acting on the axis.

> If the **- ∞ ... ∞** display mode is selected for the angle encoder, the error compensation of angle encoders does not affect negative values of the supporting points.

- Tap **Settings** in the main menu

- Tap **Axes**
- Select the axis
- Open in succession:
  - **Error compensation**
  - **Segmented linear error compensation (SLEC)**
- Use the **ON/OFF** slider to deactivate the **Compensation** function
- Tap **Create table of supporting points**
- Tap **+** or **-** to set the desired **Number of supporting points** (max. 200)
- Enter the desired **Spacing of the supporting points**
- Confirm the entry with **RET**
- Enter a value in **Start point**
- Confirm the entry with **RET**
- Tap **Create** to create the table of supporting points
- > The table of supporting points is created
- > The table lists the **supporting point positions (P)** and the **compensation values (D)** of the individual segments
- Enter the compensation value (D) **"0.0"** for supporting point **0**
- Confirm the entry with **RET**
- Enter the measured compensation value into the **compensation value (D)** input field for each supporting point created
- Confirm the entry with **RET**
- To switch to the previous display, tap **Back** twice
- Activate **Compensation** with the **ON/OFF** slide switch
- > The error compensation for the axis is applied

Further information: "Segmented linear error compensation (SLEC)", Page 263

Adjusting an existing table of supporting points

After a table of supporting points for segmented linear error compensation has been created, this table can then be modified as needed.

- Tap **Settings** in the main menu

- Tap **Axes**
- Select the axis
- Open in succession:
  - **Error compensation**
  - **Segmented linear error compensation (SLEC)**
- Use the **ON/OFF** slide switch to deactivate the **Compensation** function
- Tap **Table of supporting points**
> The table lists the **supporting point positions (P)** and the **compensation values (D)** of the individual segments
- Adjust the **compensation value (D)** for the supporting points
- Confirm the entries with **RET**
- To switch to the previous display, tap **Back**
- Activate **Compensation** with the **ON/OFF** slide switch
> The adjusted error compensation for the axis is applied

Further information: "Segmented linear error compensation (SLEC)", Page 263

7.7.5 Configuring the spindle axis

Depending on the configuration of the connected machine tool, you must configure the inputs and outputs and further parameters of the spindle axis prior to operation. If your machine tool uses a **Gear spindle** , then you can also configure the corresponding gear stages.

You can activate a **Spindle with orientation**.

- Tap **Settings** in the main menu

- Tap **Axes**
- Tap **S** or, if applicable, **Not defined**
- Tap **Axis type**
- Select the **Axis type**:
  - **Spindle**
  - **Gear spindle**
  - **Spindle with orientation**
- To switch to the previous display, tap **Back**
- If applicable, select the axis name **S** for the axis from the **Axis name** drop-down list

Basic configuration for the spindle axis

To use a spindle, you must configure some basic parameters. An overview of the basic configuration of a spindle is provided below.

> For a description of further configuration options, refer to the Settings chapter.
>
> **Further information:** "Axes", Page 246

A spindle axis can be started and stopped either via the M3/M4 **M functions** or manually.

If no M3/M4 **M functions** are available, then the spindle can be operated only manually. To do so, configure the parameters of the **Spindle start** and **Spindle stop** digital inputs.

Control of the spindle axis	Analog output	Inputs	
		Spindle start	Spindle stop
Manually	Assigned	Assigned	Assigned
M functions M3/M4	Assigned	Not connected	Not connected

Outputs

For operating a spindle, assign at least one analog output to the spindle axis.

Path: **Settings ► Axes ► S ► Outputs**

- **Type of motor**
- **Analog output** or **Output for stepper motor**
- **Minimum step frequency**: for “stepper motor” motor type
- **Minimum step frequency**: for “stepper motor” motor type
- **Open position control loop**: not enabled (position control loop closed); only for **Spindle with orientation** axis type
- **Smax**
- **Umax**: for “unipolar servo motor” or “bipolar servo motor” motor type
- **Enable clockwise rotation**: Assign the input if the motor type is a unipolar servo motor
- **Enable counterclockwise rotation**: Assign the input if the motor type is a unipolar servo motor

Further information: "Outputs (S)", Page 273

Inputs

Path: **Settings ► Axes ► S ► Inputs**

- **Movement commands from digital input**: e.g. jog buttons for Spindle Start and Spindle Stop
- **Digital enable inputs**
- **Spindle speed display via analog input**: Assign the input if the actual speed is to be displayed; indication of the spindle speed at an input voltage of 5 V

Further information: "Movement commands from digital input (S)", Page 274

Further information: "Special functions OEM bar item", Page 285

Parameters for Spindle axis type

Path: **Settings ► Axes ► Spindle axis S**

- **Start-up time for upper spindle speed range**
- **Start-up time for lower spindle speed range**
- **Break point of characteristic curve for start-up times**
- **Minimum spindle speed**

Further information: "Spindle axis S", Page 270

Parameters for Spindle with orientation axis type

Path: **Settings ► Axes ► Spindle axis S**

- **Start-up time for upper spindle speed range**
- **Start-up time for lower spindle speed range**
- **Break point of characteristic curve for start-up times**
- **Minimum spindle speed**
- **Kv factor P**
- **Kv factor L**

Further information: "Spindle axis S", Page 270

Parameters for Gear spindle axis type

Path: **Settings ► Axes ► S ► Gear stages**

- **Name**
- **Smax**
- **Start-up time for upper spindle speed range**
- **Start-up time for lower spindle speed range**
- **Break point of characteristic curve for start-up times**
- **Minimum spindle speed**

Further information: "Adding Gear stages", Page 276

Further information: "Gear stages", Page 277

7.7.6 Configuring Axis+ NC

Depending on the setup of the connected machine tool, you can configure various parameters for your NC-controlled axes.

- Tap **Settings** in the main menu

- Tap **Axes**
- Tap <Axis name> or **Not defined**, if applicable
- Tap **Axis type**
- Select **Axis+ NC** (software option)

- To switch to the previous display, tap **Back**
- If applicable, select the name of the axis from the **Axis name** drop-down list

Basic configuration for Axis + NC

For an NC-controlled movement of an axis, you must configure some basic parameters. The following basic configuration is required for NC-controlled axes:

> For a description of further configuration options, refer to the Settings chapter.
>
> **Further information:** "Axes", Page 246

Outputs

Path: **Settings ► Axes ► Axis name ► Outputs**

- **Type of motor**
- **Analog output** or **Output for stepper motor**
- **Minimum step frequency**: for “stepper motor” motor type
- **Minimum step frequency**: for “stepper motor” motor type
- **Open position control loop**: not enabled (position control loop closed)
- **Fmax**
- **Umax**: for “unipolar servo motor” or “bipolar servo motor” motor type
- **Enable clockwise rotation**: Assign the input if the motor type is a unipolar servo motor
- **Enable counterclockwise rotation**: Assign the input if the motor type is a unipolar servo motor

Further information: "Outputs", Page 264

Inputs

Path: **Settings ► Axes ► Axis name ► Inputs**

- Select **Movement commands from digital input** (e.g., jog buttons) or **Movement commands from analog input** (e.g., joystick)
- If you selected **Movement commands from analog input**, further parameters must be entered

Further information: "Inputs", Page 266

Parameter

Path: **Settings ► Axes ► Axis name**

- **Start-up time**
- **Kv factor P**
- **Kv factor L**

Further information: "<Axis name> (settings of the axis)", Page 253

Path: **Settings ► Axes ► General settings ► Switching functions ► Inputs**

- **Control voltage on**: Assign the input (e.g., machine key)
- **Rapid traverse**: Assign the input (e.g., machine key)
- **Automatic feed**: Assign the input (e.g., NC Start)

Further information: "Inputs (Switching functions)", Page 249

Path: **Settings ► Axes ► General settings ► Overrides**

- **Input for feed override**: Assign the input (e.g., feed-rate potentiometer)
- **Umax**

Further information: "Overrides", Page 251

7.7.7 Configuring an Electronic handwheel

Depending on the setup of the connected machine tool, you can configure various parameters for your electronic handwheel.

Proceed as follows:

- Select the **Electronic handwheel** axis type
- Define the settings for the handwheel used
- Assign the handwheel to the desired axis

- ▶ Tap **Settings** in the main menu

- ▶ Tap **Axes**
- ▶ Tap <Axis name> or **Not defined** as needed
- ▶ Tap **Axis type**
- ▶ Select **Electronic handwheel** (software option)

- ▶ To switch to the previous display, tap **Back**
- > The name is automatically assigned

Basic configuration for an electronic handwheel

If you want to use an electronic handwheel to move an axis, you need to configure the basic parameters. An overview of the basic configuration of an electronic handwheel is provided below.

Encoder

Path: **Settings ► Axes ► Handwheel name ► Encoder**

You first enter the parameters of the encoder used for the electronic handwheel.

- Configure the axes

Further information: "Configuring the axes for encoders with a 1 V_{PP} or 11 μA_{PP} interface", Page 102

Further information: "Configuring axes for encoders with EnDat interface", Page 100

Inputs

Now you assign the handwheel to the axis you want to move and define the settings for the handwheel.

Path: **Settings ► Axes ► Axis name ► Inputs ► Movement commands from electronic handwheel**

- **Enable movement commands from electronic handwheel**: Set to ON
- **Selection of the electronic handwheel**: Select the handwheel you want to use for the axis
- **Permissive button for movement commands from electronic handwheel**: Assign the input (e.g., machine key)

All other parameters are populated with default values. Adapt these values based on the requirements of your machine

Further information: "Movement commands from electronic handwheel", Page 268

7.7.8 Coupling axes

If you couple axes with each other, the product offsets the position values of the two axes according to the selected calculation type. The position display shows only the principal axis with the calculated position value. Coupled axes are not shown in the position display.

- Tap **Settings** in the main menu

- Tap **Axes**
- Tap <Axis name> or, if applicable, **Not defined** for the axis you wish to couple with a principal axis
- Tap **Axis type**
- Select the **Coupled axis** axis type

- To switch to the previous display, tap **Back**
- Select the desired principal axis from the **Coupled main axis** drop-down list
- Select the desired calculation type from the **Calculation with main axis** drop-down list:
  - **+**: principal axis + coupled axis
  - **-**: principal axis - coupled axis

> The position values of both axes are offset against each other according to the selected type of calculation

Further information: "<Axis name> (settings of the axis)", Page 253

7.7.9 Activating the reference mark search

The product uses the reference marks to reference the machine table to the machine. If the reference mark search has been activated, a wizard appears on startup of the product and asks the user to move the axes for the reference mark search.

Prerequisite: The installed encoders have reference marks that have been configured in the axis parameters.

> The reference mark search does not need to be performed for serial encoders with EnDat interface, because the axes are automatically homed.

> The automatic reference mark search on startup of the product can be canceled depending on the configuration.
> **Further information:** "Reference marks (Encoder)", Page 259

- Tap **Settings** in the main menu

- Tap **Axes**
- Open in succession:
  - **General settings**
  - **Reference marks**
- Activate **Reference mark search after unit start** with the **ON/OFF** slide switch
> The reference marks must be traversed every time the product is started
> The functions of the product will only be available after the reference mark search has been completed
> The Reference symbol stops blinking upon successful completion of the reference mark search
> **Further information:** "Operating elements of the position display", Page 78

7.8 Configuring M functions

Depending on the configuration of the machine tool, you can also use M functions (machine functions) for machining operations. You can use M functions to influence the following factors:

- functions on the machine tool, such as switching the spindle rotation and coolant on and off
- the path behavior of the tool, and
- the program execution

You can use all M functions as block type in programming and program run.

Further information: "Machine functions", Page 208

A graphic can also be optionally displayed for calling the M functions in the program run.

Further information: "Configuring M functions", Page 287

The product differentiates between standard M functions and the manufacturer-specific M functions.

7.8.1 Standard M functions

The product supports the following standard M functions (oriented to DIN 66025/ ISO 6983):

Code	Description
M2	**Program STOP, spindle STOP, coolant OFF**
M3	**Spindle rotation in clockwise direction**
M4	**Spindle rotation in counterclockwise direction**
M5	**Spindle STOP**
M8	**Coolant ON**
M9	**Coolant OFF**
M30	**Program STOP, spindle STOP, coolant OFF**

These M functions are independent of the machine; some M functions however depend on the machine tool configuration (e.g. spindle functions).

7.8.2 Manufacturer-specific M functions

> The manufacturer-specific M functions M100 to M120 are only available if the connected output has been previously configured.
>
> **Further information:** "Configuring M functions", Page 251

The product also supports manufacturer-specific M functions with the following characteristics:

- Number range definable from M100 to M120
- Function depends on the machine manufacturer
- Use in the button of the OEM bar

  Further information: "Configuring the OEM bar", Page 118

7.9 OEM area

In the **OEM area**, commissioning engineers can customize the product in various ways:

- **Documentation**: Adding the OEM documentation, e.g. service information
- **Startup screen**: Defining a startup screen with the OEM's company logo
- **OEM bar**: Configuring an OEM bar with specific functions
- **Settings**: Selecting the application, customizing the display elements and messages
- **Screenshots**: Configuring the unit for screenshots with the program ScreenshotClient

7.9.1 Adding documentation

You can store and display the product's documentation right on the product.

> Only documents in the *.pdf file format can be added as a documentation. The product does not display documents provided in other file formats.

- Tap **Settings** in the main menu
- Tap **Service**
- Open in succession:
  - **OEM area**
  - **Documentation**
  - **Add OEM service info**
- If required, connect a USB mass storage device (FAT32 format) to a USB port of the product
- To navigate to the desired file, tap the location where the file is stored

> If you have accidentally tapped the wrong folder, you can return to the previous folder.
>
> - Tap the file name that is displayed above the list

- Navigate to the folder containing the file
- Tap the file name
- Tap **Select**
- > The file is copied to the unit's **Service info** area
  Further information: "Service info", Page 238
- Confirm the successful transfer with **OK**

Further information: "Documentation", Page 289

Safely removing a USB mass storage device

- Tap **File management** in the main menu
- Navigate to the list of storage locations
- Tap **Safely remove**
- > The message **"The storage medium can be removed now."** appears
- Disconnect the USB mass storage device

7.9.2 Adding a startup screen

You can define an OEM-specific startup screen, e.g. the company name or logo, which will be displayed when the product is switched on. An image file with the following properties needs to be stored on the product for this purpose:

- File type: PNG or JPG
- Resolution: 96 ppi
- Image format: 16:10 (other formats will be scaled proportionally)
- Image size: Max. 1280 x 800 px

Adding a startup screen

- Tap **Settings** in the main menu

- Tap **Service**
- Open in succession:
  - **OEM area**
  - **Startup screen**
  - **Add startup screen**
- If required, connect a USB mass storage device (FAT32 format) to a USB port of the product
- To navigate to the desired file, tap the location where the file is stored

> If you have accidentally tapped the wrong folder, you can return to the previous folder.
>
> - Tap the file name that is displayed above the list

- Navigate to the folder containing the file
- Tap the file name
- Tap **Select**
- > The graphic file is copied to the product and displayed as the startup screen the next time the product is started
- Confirm the successful transfer with **OK**

Safely removing a USB mass storage device

- Tap **File management** in the main menu
- Navigate to the list of storage locations

- Tap **Safely remove**
- > The message **"The storage medium can be removed now."** appears
- Disconnect the USB mass storage device

> When you save the user files, the OEM-specific opening screen is also saved and can be restored.
>
> **Further information:** "Back up user files", Page 130

7.9.3 Configuring the OEM bar

You can configure the appearance and the menu items of the OEM bar.

> If you configure more menu entries than can be shown in the **OEM bar**, then you can scroll the **OEM bar** vertically.

Showing or hiding the OEM bar

- Tap **Settings** in the main menu
- Tap **Service**
- Open in the sequence
  - **OEM area**
  - **OEM bar**
- Use the **ON/OFF** slider to activate or deactivate the **Show bar** function

Configuring the OEM logo

You can display an OEM-specific company logo on the OEM bar. By tapping the OEM logo, you can optionally open a PDF file of the OEM documentation.

Configuring an OEM logo

- Tap **Settings** in the main menu
- Tap **Service**
- Open in the sequence
  - **OEM area**
  - **OEM bar**
  - **Bar items**
- Tap **Add**
- Tap the **Description** input field
- Enter a description for the menu item
- Confirm the entry with **RET**
- Tap **Logo** in the **Type** drop-down list
- Tap **Select logo** to choose a stored image file
- If required, tap **Upload image file** to select a new image file
  Further information: "OEM bar item: Logo", Page 283
- Navigate to the folder containing the image file, and select the file
- Tap **Select**
- Select the desired option in the **Link to documentation** drop-down list

Configuring nominal values for the spindle speed

On the OEM bar, you can define menu items that control the spindle speeds depending on the configuration of the machine tool.

> You can overwrite configured spindle speeds with the value of the currently set speed of the spindle axis by pressing and holding the desired **Spindle speed** field.
>
> **Further information:** "Calling functions of the OEM bar", Page 84

Configuring nominal values for the spindle speed

- Tap **Settings** in the main menu
- Tap **Service**
- Open in the sequence
  - **OEM area**
  - **OEM bar**
  - **Bar items**
- Tap **Add**
- Tap the **Description** input field
- Enter a description for the menu item
- Confirm the entry with **RET**
- Tap **Spindle speed** in the **Type** drop-down list
- Tap the name of the spindle in the **Spindle** drop-down list
- Enter the desired nominal value into the **Spindle speed** input field

Configuring M functions

On the OEM bar, you can define menu items that control the use of M functions depending on the configuration of the machine tool.

> The manufacturer-specific M functions M100 to M120 are only available if the connected output has been previously configured.
>
> **Further information:** "Configuring M functions", Page 251

Configuring M functions

- Tap **Settings** in the main menu
- Tap **Service**
- Open in the sequence
  - **OEM area**
  - **OEM bar**
  - **Bar items**
- Tap **Add**
- Tap the **Description** input field
- Enter a description for the menu item
- Confirm the entry with **RET**
- Tap **M function** in the **Type** drop-down list
- Enter the number into the **Number of the M function** input field:
  - **100.T ... 120.T** (**TOGGLE** switches between the states when tapped)
  - **100.P ... 120.P** (**PULSE** outputs a short pulse when activated; it can be extended by setting the **Pulse time**)
- Confirm the entry with **RET**
- For every M function, you can also define corresponding images for displaying the status using **Select image for active function** and **Select image for inactive function**

Further information: "M function OEM bar item", Page 284

Configuring special functions

On the OEM bar, you can define menu items that control special functions of the connected machine tool.

> The available functions depend on the configuration of the device and of the connected machine tool.

Configuring special functions

- Tap **Settings** in the main menu
- Tap **Service**
- Open in the sequence
  - **OEM area**
  - **OEM bar**
  - **Bar items**
- Tap **Add**
- Tap the **Description** input field
- Enter a description for the menu item
- Confirm the entry with **RET**
- Tap **Special functions** in the **Type** drop-down list
- Tap the desired special function in the **Function** drop-down list
  - **Thread cutting**
  - **Spindle direction**
  - **Coolant**
  - **Coolant during spindle operation**
  - **Clamp axes**
  - **Zero the tool axis**
- For each special function, you can also define corresponding images for displaying the status using **Select image for active function** and **Select image for inactive function**
  Further information: "Special functions OEM bar item", Page 285

Configuring documents

On the OEM bar, you can define menu items that display additional documents. The file to be displayed needs to be stored in PDF format on the product for this purpose.

Configuring documents

- Tap **Settings** in the main menu
- Tap **Service**
- Open in the sequence
  - **OEM area**
  - **OEM bar**
  - **Bar items**
- Tap **Add**
- Tap the **Description** input field
- Enter a description for the menu item
- Confirm the entry with **RET**
- Tap **Document** in the **Type** drop-down list
- Tap **Select a document** to choose a stored document
- Tap **Select image for display** to select the image file you want to display
- Navigate to the folder containing the image file, and select the file
- Tap **Select**

Deleting menu items

You can delete individual menu items from the OEM bar.

Deleting menu items

- Tap **Settings** in the main menu
- Tap **Service**
- Open in the sequence
  - **OEM area**
  - **OEM bar**
  - **Bar items**
- Tap the desired menu item
- Tap **Remove bar entry**
- Tap **OK** to confirm deletion
- > The menu item is deleted from the OEM bar

7.9.4 Adjusting the display

You can adjust the override display in the **Manual operation** and **MDI** menus. You can also define the layout of the screen keyboard.

Adjusting the Override display

- Tap **Settings** in the main menu

- Tap **Service**
- Open in the sequence
  - **OEM area**
  - **Settings**
- Select the desired unit from the **Override display** drop-down list:
  - **Percent**: percentage difference of the traversing speed
  - **Value**: absolute value of the traversing speed

Defining the keyboard design

- Tap **Settings** in the main menu

- Tap **Service**
- Open in the sequence
  - **OEM area**
  - **Settings**
- Select the desired layout for the screen keyboard from the **Keyboard theme** drop-down list

7.9.5 Defining error messages

As an OEM, you can define specific error messages that overwrite standard error messages or are triggered by defined input signals as additional messages. For this purpose, you can create a text database that contains your specific error messages.

Creating a Text database

To create a text database containing the OEM-specific error messages, you create a file of the *.xml type and add your entries for the individual message texts to this file.

The XML file must be in UTF-8 format. The following figure shows the correct structure of the XML file:

```xml
<?xml version="1.0" encoding="UTF-8"?>
<source version="1">
    <entry id="ID_OEM_EMERGENCY_STOP">
        <text lang="de">Der Not-Aus ist aktiv.</text>
        <text lang="cs">Nouzové zastavení je aktivní.</text>
        <text lang="en">The emergency stop is active.</text>
        <text lang="fr">L&apos;arrêt d&apos;urgence est actif.</text>
        <text lang="it">L&apos;arresto d&apos;emergenza è attivo.</text>
        <text lang="es">La parada de emergencia está activa.</text>
        <text lang="ja">緊急停止がアクティブです。</text>
        <text lang="pl">Wyłączenie awaryjne jest aktywne.</text>
        <text lang="pt">O desligamento de emergência está ativo.</text>
        <text lang="ru">Активен аварийный останов.</text>
        <text lang="zh">急停激活。</text>
        <text lang="zh-tw">緊急停止啟動。</text>
        <text lang="ko">비상 정지가 작동 중입니다.</text>
        <text lang="tr">Acil kapatma etkin.</text>
        <text lang="nl">De noodstop is actief.</text>
    </entry>
    <entry id="ID_OEM_CONTROL_VOLTAGE">
        <text lang="de">Es liegt keine Steuerspannung an.</text>
        <text lang="cs">Není použito žádné řídicí napětí.</text>
        <text lang="en">No machine control voltage is being applied.</text>
        <text lang="fr">Aucune tension de commande n&apos;est appliquée.</text>
        <text lang="it">Non è applicata alcuna tensione di comando.</text>
        <text lang="es">No está aplicada la tensión de control.</text>
        <text lang="ja">御電圧は適用されていません。</text>
        <text lang="pl">Brak zasilania sterowania.</text>
        <text lang="pt">Não existe tensão de comando.</text>
        <text lang="ru">Управляющее напряжение отсутствует.</text>
        <text lang="zh">无控制电压。</text>
        <text lang="zh-tw">並無供應控制電壓。</text>
        <text lang="ko">공급된 제어 전압이 없습니다.</text>
        <text lang="tr">Kumanda gerilimi mevcut değil.</text>
        <text lang="nl">Er is geen sprake van stuurspanning.</text>
    </entry>
</source>
```

Figure 26: Example – XML file for text database

Then you import the XML file by means of a USB mass storage device (FAT32 format) into the product and save it, for example, to the **Internal/Oem** storage location.

Importing a Text database

- Tap **Settings** in the main menu

- Tap **Service**
- Open in the sequence
  - **OEM area**
  -
  - **Text database**
- To navigate to the desired file, tap the location where the file is stored

> If you have accidentally tapped the wrong folder, you can return to the previous folder.
>
> - Tap the file name that is displayed above the list

- Navigate to the folder containing the XML file
- Tap the file name
- Tap **Select**
- Confirm the successful transfer with **OK**
- > You have now successfully imported the **Text database**

Further information: "Text database", Page 287

Configuring error messages

The OEM-specific error messages can be gated to inputs as additional messages. The error messages will then be displayed when the input is activated. For this to work, you need to assign the error messages to the desired input signals.

- Tap **Settings** in the main menu

- Tap **Service**
- Open in the sequence
  - **OEM area**
  - **Settings**
  - **Messages**

- Tap **Add**
- Tap the **Name** input field
- Enter a unique name
- Confirm the entry with **RET**
- Tap the **Text ID or text** input field
- Enter the new message text

or

- Enter the text ID of a message text from the text database
- Select the desired message type in the **Message type** drop-down list:
  - **Standard**: The message is displayed as long as the input is active
  - **Acknowledgment by user**: The message is displayed until the user acknowledges it
- Tap **Input**
- Select the desired digital input
- To switch to the previous display, tap **Back**

Further information: "Messages", Page 288

Deleting error messages

You can delete individual existing error messages.

- Tap **Settings** in the main menu

- Tap **Service**
- Open in the sequence
  - **OEM area**
  - **Settings**
  - **Messages**
- Tap the desired message entry
- Tap **Remove the entry**
- Tap **OK** to confirm deletion
> The error message is deleted

7.9.6 Backing up and restoring OEM settings

All settings of the OEM area can be backed up as a file so that they are available after a reset to the factory default settings has been performed or for installation on multiple units.

Back-up OEM-specific folders and files

The settings of the OEM area can be backed up as a ZIP file on a USB mass storage device or connected network drive.

- Tap **Settings** in the main menu

- Tap **Service**
- Open in the sequence
  - **OEM area**
  - **Back up and restore**
  - **Back-up OEM-specific folders and files**
  - **Save as ZIP**
- If required, connect a USB mass storage device (FAT32 format) to a USB port of the product
- Select the folder to which you want to copy the data
- Specify a name for the data, e.g. "<yyyy-mm-dd>_OEM_config"
- Confirm the entry with **RET**
- Tap **Save as**
- Tap **OK** to confirm the successful backup of the data
- > The data were saved

Restore OEM specific folders and files

- Tap **Settings** in the main menu

- Tap **Service**
- Open in the sequence
  - **OEM area**
  - **Back up and restore**
  - **Restore OEM specific folders and files**
  - **Load as ZIP**
- If required, connect a USB mass storage device (FAT32 format) to a USB port of the product
- Navigate to the folder containing the backup file
- Select the backup file
- Tap **Select**
- Confirm the successful transfer with **OK**

Safely removing a USB mass storage device

- Tap **File management** in the main menu
- Navigate to the list of storage locations
- Tap **Safely remove**
- > The message **"The storage medium can be removed now."** appears
- Disconnect the USB mass storage device

7.9.7 Configuring the unit for screenshots

ScreenshotClient

With the ScreenshotClient PC software, you can use a computer to take screenshots of the active screen of the product.

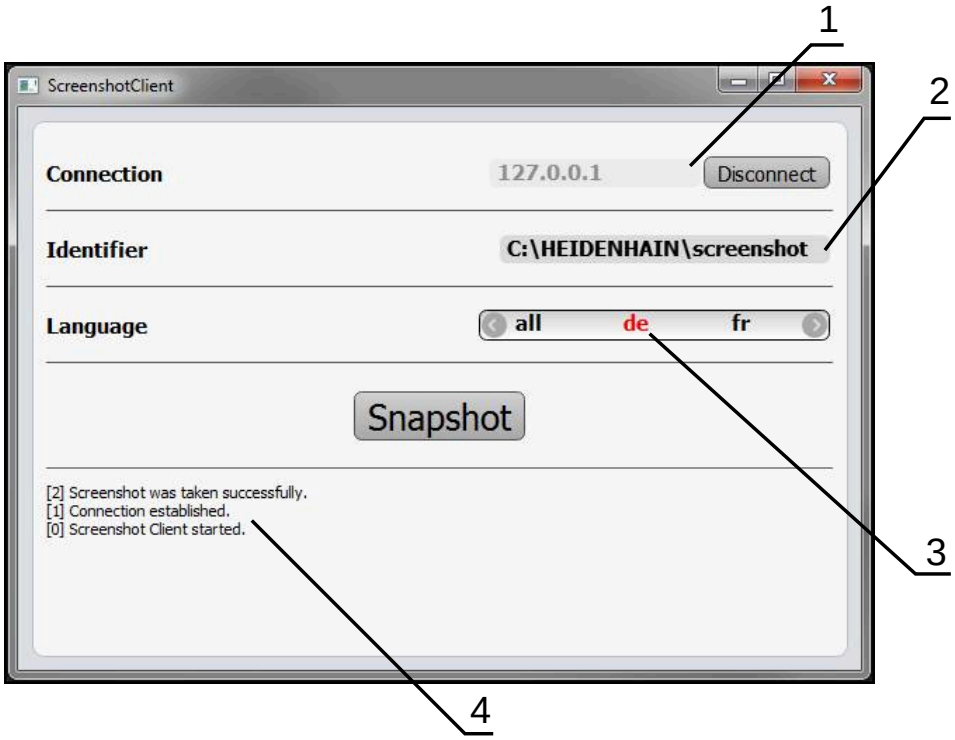

Figure 27: The ScreenshotClient user interface

1 Connection status
2 File path and file name
3 Language selection
4 Status messages

	ScreenshotClient is included in the standard installation of **POSITIP 8000 Demo**.

	For a detailed description, please refer to the **POSITIP 8000 Demo User's Manual**. This User's Manual is available in the "Documentation" folder of the product website.

Further information: "Demo software for the product", Page 18

Activating remote access for screenshots

To connect ScreenshotClient with the product via the computer you need to activate **Remote access for screenshots** on the product.

- Tap **Settings** in the main menu

- Tap **Service**
- Tap **OEM area**
- Activate **Remote access for screenshots** with the **ON/OFF** slide switch

Further information: "OEM area", Page 281

7.10 Backing up data

7.10.1 Back up settings

The product's settings can be backed up as a file so that they are available after a reset to the factory default settings has been performed or for installation on multiple units.

- Tap **Settings** in the main menu

- Tap **Service**
- Open in succession:
  - **Back up and restore**
  - **Back up settings**

Performing a Complete backup

During a complete backup of the configuration, all settings of the product are backed up.

- Tap **Complete backup**
- If required, connect a USB mass storage device (FAT32 format) to a USB port of the product
- Select the folder to which you want to copy the configuration data
- Specify a name for the configuration data, e.g. "<yyyy-mm-dd>_config"
- Confirm the entry with **RET**
- Tap **Save as**
- Tap **OK** to confirm the successful backup of the configuration
- > The configuration file was backed up

Further information: "Back up and restore", Page 279

Safely removing a USB mass storage device

- Tap **File management** in the main menu
- Navigate to the list of storage locations
- Tap **Safely remove**
- > The message **"The storage medium can be removed now."** appears
- Disconnect the USB mass storage device

7.10.2 Back up user files

The user files of the product can be backed up as a file to make it available after a reset to the factory default settings. This, together with the backing up of the settings, enables you to back up the complete configuration of your product.

Further information: "Back up settings", Page 129

> All files from all user groups that are stored in the respective folders are backed up and can be restored as user files.
>
> The files in the **System** folder are not restored.

Performing back up

The user files can be backed up as a ZIP file on a USB mass storage device or connected network drive.

- Tap **Settings** in the main menu
- Tap **Service**
- Open in succession:
  - **Back up and restore**
  - **Back up user files**
- Tap **Save as ZIP**
- If required, connect a USB mass storage device (FAT32 format) to a USB port of the product
- Select the folder to which you want to copy the ZIP file
- Specify a name for the ZIP file, e.g. "<yyyy-mm-dd>_config"
- Confirm the entry with **RET**
- Tap **Save as**
- Tap **OK** to confirm successful backup of the user files
- > The user files were backed-up.

Further information: "Back up and restore", Page 279

Safely removing a USB mass storage device

- Tap **File management** in the main menu
- Navigate to the list of storage locations
- Tap **Safely remove**
- > The message **"The storage medium can be removed now."** appears
- Disconnect the USB mass storage device

8

Setup

8.1 Overview

This chapter contains all the information necessary for setting up the product.

During setup, the setup engineer (**Setup**) configures the product for use on the machine tool in the respective applications. This includes, for example, setting up operators and creating preset tables and tool tables.

> Make sure that you have read and understood the "Basic operation" chapter before carrying out the actions described below.
>
> **Further information:** "Basic operation", Page 57

> The following steps must be performed only by qualified personnel.
>
> **Further information:** "Personnel qualification", Page 29

8.2 Logging in for setup

8.2.1 User login

To set up the product, the **Setup** user must log in.

- Tap **User login** in the main menu
- If required, log out the user who is currently logged in
- Select the **Setup** user
- Tap the **Password** input field
- Enter the password "**setup**"

> If the password does not match the default password, ask a **Setup** user or **OEM** user for the assigned password.
>
> If the password is no longer known, contact a HEIDENHAIN service agency.

- Confirm the entry with **RET**

- Tap **Log in**

8.2.2 Performing the reference mark search after startup

> If the reference mark search after unit start is active, then all of the unit's functions will be disabled until the reference mark search has been successfully completed.
>
> **Further information:** "Reference marks (Encoder)", Page 259

> The reference mark search does not need to be performed for serial encoders with EnDat interface, because the axes are automatically homed.

If the reference mark search is active on the unit, then a wizard will ask you to traverse the reference marks of the axes.

- ▶ After logging in, follow the instructions of the wizard
- > The Reference symbol stops blinking upon successful completion of the reference mark search

Further information: "Operating elements of the position display", Page 78

Further information: "Activating the reference mark search", Page 114

8.2.3 Setting the language

The user interface language is English. You can change to another language, if desired.

- ▶ Tap **Settings** in the main menu

- ▶ Tap **User**
- > The logged-in user is indicated by a check mark
- ▶ Select the logged-in user
- > The language selected for the user is indicated by a national flag in the **Language** drop-down list
- ▶ Select the flag for the desired language from the **Language** drop-down list
- > The user interface is displayed in the selected language

8.2.4 Changing the password

You must change the password to prevent unauthorized configuration.
The password is confidential and must not be disclosed to any other person.

- Tap **Settings** in the main menu

- Tap **User**
- > The logged-in user is indicated by a check mark
- Select the logged-in user
- Tap **Password**
- Enter the current password
- Confirm entry with **RET**
- Enter the new password and repeat it
- Confirm entry with **RET**
- Tap **OK**
- Close the message with **OK**
- > The new password is available the next time the user logs in

8.3 Single steps for setup

The following setup steps build on each other.

- To correctly set up the product, make sure to perform the steps in the order described here

Prerequisite: You are logged on as a user of the **Setup** type (see "Logging in for setup", Page 132).

Basic settings

- Setting the date and time
- Setting the units of measure
- Entering and configuring users
- Adding the Operating Instructions
- Configuring the network
- Configuring the network drive
- Configuring operation with a mouse or touchscreen
- Configuring the USB keyboard

Preparing machining processes

- Creating a tool table
- Creating a preset table

Backing up data

- Back up settings
- Back up user files

NOTICE

Loss of or damage to configuration data!

If the product is disconnected from the power source while it is on, the configuration data can be lost or corrupted.

- Back up the configuration data and keep the backup for recovery purposes

8.3.1 Basic settings

The commissioning engineer (**OEM**) may have already carried out several basic settings.

Setting the date and time

- Tap **Settings** in the main menu

- Tap **General**
- Tap **Date and time**
- > The set values are displayed in the following format: Year, month, day, hour, minute
- To set the date and time in the middle line, drag the columns up or down
- Tap **Set** to confirm
- Select the desired format from the **Date format** list:
  - MM-DD-YYYY: Display as month, day, year
  - DD-MM-YYYY: Display as day, month, year
  - YYYY-MM-DD: Display as year, month, day

Further information: "Date and time", Page 236

Setting the units of measure

You can set various parameters to define the units of measure, rounding methods and decimal places.

- Tap **Settings** in the main menu

- Tap **General**
- Tap **Units**
- To set a unit of measure, tap the corresponding drop-down list and select the unit
- To set the rounding method, tap the corresponding drop-down list and select the rounding method
- To set the number of decimal places displayed, tap **-** or **+**

Further information: "Units", Page 236

Entering and configuring users

The following user types, which have different rights, are defined in the product's factory default settings:

- **OEM**
- **Setup**
- **Operator**

Creating a user and password

You can create new **Operator** users. You can use any characters for the user ID and the password. These entries are case-sensitive.

Prerequisite: An **OEM** or **Setup** user is logged in.

> It is not possible to create new **OEM** or **Setup**-type users.

- Tap **Settings** in the main menu
- Tap **User**
- Tap **Add**
- Tap the **User ID** input field

> The **User ID** is displayed for user selection, e.g. at the login prompt.
> The **User ID** cannot be changed once it has been defined.

- Enter the user ID
- Confirm the entry with **RET**
- Tap the **Name** input field
- Enter the name of the new user
- Confirm the entry with **RET**
- Tap the **Password** input field
- Enter the new password and repeat it
- Confirm the entry with **RET**

> You can show the contents of the password fields in plain text and hide them again.
> - Use the **ON/OFF** sliding switch to show or hide the contents

- Tap **OK**
> A message appears
- Close the message with **OK**
> The user is created with the basic data. The user can then further edit the data himself later

Configuring the user

After creating a new **Operator**-type user, you can add or edit the following user data:

- Name
- First name
- Department
- Password
- Language
- Auto login

> If automatic user login is active for one or more users, the last user who logged in is automatically logged in when the product is switched on. Neither the user ID nor the password needs to be entered.

- ▶ Tap **Settings** in the main menu

- ▶ Tap **User**
- ▶ Select the user
- ▶ Tap the input field whose contents you want to edit: **Name**, **First name**, **Department**
- ▶ Edit the contents and confirm your changes with **RET**
- ▶ To change the password, tap **Password**
- > The **Change password** dialog box appears
- ▶ When changing the password of the logged-in user, enter the current password
- ▶ Confirm the entry with **RET**
- ▶ Enter the new password and repeat it
- ▶ Confirm the entries with **RET**
- ▶ Tap **OK**
- > A message appears
- ▶ Close the message with **OK**
- ▶ To change the language, select the flag for the desired language in the **Language** drop-down list
- ▶ Use the **ON/OFF** slider to activate or deactivate the **Auto login** function

Deleting users

You can remove **Operator**-type users that are no longer needed.

> **OEM** and **Setup**-type users cannot be deleted.

Prerequisite: A user of **OEM** or **Setup**-type is logged in.

- Tap **Settings** in the main menu

- Tap **User**
- Tap the user you want to delete
- Tap **Remove user account**
- Enter the password of the authorized user (**OEM** or **Setup**)
- Tap **OK**
> The user is deleted

Adding the Operating Instructions

The product provides the possibility to upload the corresponding Operating Instructions in the desired language. You can copy the Operating Instructions from the supplied USB mass storage device to the product.

The most recent version of the Operating Instructions is also available at **www.heidenhain.com**.

Prerequisite: The Operating Instructions are available as a PDF file.

- Tap **Settings** in the main menu

- Tap **Service**
- Open in succession:
  - **Documentation**
  - **Add Operating Instructions**
- If required, connect a USB mass storage device (FAT32 format) to a USB port of the product
- Navigate to the folder containing the new Operating Instructions

> If you have accidentally tapped the wrong folder, you can return to the previous folder.
>
> - Tap the file name that is displayed above the list

- Select file
- Tap **Select**
> The Operating Instructions are copied to the product
> Any existing Operating Instructions will be overwritten
- Confirm the successful transfer with **OK**
> The Operating Instructions can be opened and displayed on the product

Configuring the network

Network settings

> Contact your network administrator for the correct network settings for configuring the product.

Prerequisite: The unit is connected to a network.

Further information: "Connecting a network peripheral", Page 55

- Tap **Settings** in the main menu

- Tap **Interfaces**
- Tap **Network**
- Tap the desired interface (**X116** or **X117**)
- > The MAC address is detected automatically
- Depending on the network environment, use the **ON/OFF** slider to activate or deactivate the **DHCP** function
- > If DHCP is active, the network settings are obtained automatically as soon as the IP address is assigned
- If DHCP is not active, enter the **IPv4 address**, **IPv4 subnet mask** and **IPv4 standard gateway**
- Confirm the entries with **RET**
- Depending on the network environment, use the **ON/OFF** slider to activate or deactivate the **IPv6 SLAAC** function
- > If IPv6 SLAAC is active, the network settings are obtained automatically as soon as the IP address is assigned
- If IPv6 SLAAC is not active, enter the **IPv6 address**, **IPv6 subnet prefix length** and **IPv6 standard gateway**
- Confirm the entires with **RET**
- Enter the **Preferred DNS server** and, if required, the **Alternative DNS server**
- Confirm the entires with **RET**
- > The configuration of the network connection is applied

Further information: "Network", Page 240

Configuring the network drive

You will need the following data for configuring the network drive:

- **Name**
- **Server IP address or host name**
- **Shared folder**
- **User name**
- **Password**
- **Network drive options**

> Contact your network administrator for the correct network settings for configuring the product.

Prerequisite: The product is connected to a network and a network drive is available.

Further information: "Connecting a network peripheral", Page 55

- Tap **Settings** in the main menu

- Tap **Interfaces**
- Tap **Network drive**
- Enter the network drive details
- Confirm the entries with **RET**
- Use the **ON/OFF** slider to activate or deactivate the **Show password** function
- If required, select **Network drive options**
  - Select **Authentication** for encrypting the password in the network
  - Configure the **Mount options**
  - Tap **OK**
- Tap **Mount**
- The connection to the network drive is established

Further information: "Network drive", Page 241

Configuring operation with a mouse or touchscreen

The product can be operated either via the touchscreen or a connected (USB) mouse. If the product is in its factory default setting, touching the touchscreen deactivates the mouse. Alternatively, you can set that the product is operated either only via the mouse or only via the touchscreen.

Prerequisite: A USB mouse is connected to the product.

Further information: "Connecting input devices", Page 55

You can modify the touch sensitivity of the touchscreen to allow operation under special conditions (e.g. for operation with gloves).

- Tap **Settings** in the main menu

- Tap **General**
- Tap **Input devices**
- Select the desired option from the **Touchscreen sensitivity** drop-down list
- Select the desired option from the **Mouse substitute for multitouch gestures** drop-down list

Further information: "Input devices", Page 234

Configuring the USB keyboard

The factory default language for the keyboard assignment is English. You can switch the keyboard assignment to the desired language.

Prerequisite: A USB keyboard is connected to the product.

Further information: "Connecting input devices", Page 55

- Tap **Settings** in the main menu

- Tap **General**
- Tap **Input devices**
- Select the flag for the desired language from the **USB keyboard layout** drop-down list
- > The keyboard assignment corresponds to the selected language

Further information: "Input devices", Page 234

8.3.2 Preparing machining processes

Depending on the intended use, the machine setter (**Setup**) can prepare the unit for a special machining process through configuration of the tool tables and preset tables.

> The following activities can also be performed by **Operator**-type users.

Creating a tool table

You usually enter the coordinates in accordance with how the workpiece is dimensioned in the drawing.

By means of tool radius compensation, the product can calculate the path of the tool center point. To do this, you must specify the **Tool length** and **Diameter** for every tool.

From the status bar, you can access the tool table, which contains these specific parameters for each tool that is used. You can save a maximum of 99 tools in the tool table.

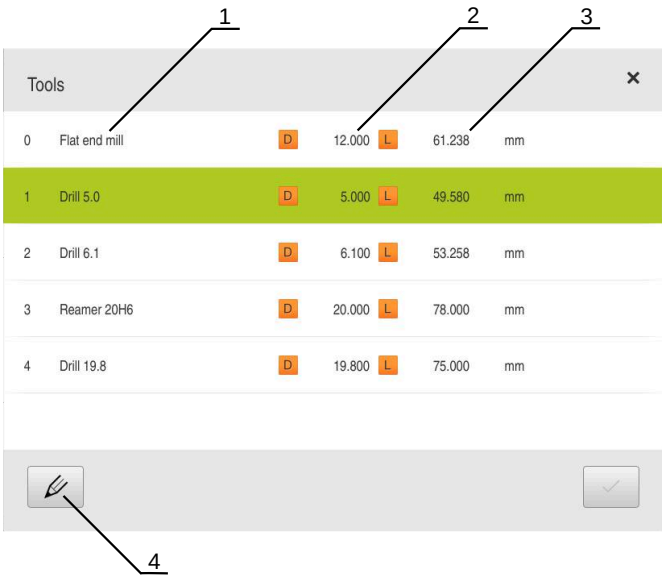

Figure 28: Tool table with tool parameters

1 Tool type
2 Tool diameter
3 Tool length
4 Edit tool table

Tool parameters

You can define the following parameters:

Description	Parameter	
Tool type	**Diameter D**	**Length L**
Designation that uniquely identifies the tool	Diameter of the tool contact surface	Tool length along the tool axis

Creating a tool

- ▶ Tap **Tools** on the status bar
- > The **Tools** dialog box appears

- ▶ Tap **Open table**
- > The **Tool table** dialog box appears
- ▶ Tap **Add**
- ▶ Enter a name in the **Tool type** input field
- ▶ Confirm the entry with **RET**
- ▶ Tap the input fields one after the other, and enter the corresponding values
- ▶ Change the unit of measure in the selection menu, if required
- > The entered values are converted
- ▶ Confirm the entry with **RET**
- > The defined tool is added to the tool table
- ▶ To protect the entry for a tool from accidental changes or deletion, tap the **Lock** symbol next to the tool's entry
- > The symbol changes and the entry is locked

- ▶ Tap **Close**
- > The **Tool table** dialog box is closed

Deleting a tool

- ▶ Tap **Tools** on the status bar
- > The **Tools** dialog box appears

- ▶ Tap **Open table**
- > The **Tool table** dialog box appears
- ▶ To select one or more tools, tap the checkbox in the relevant row
- > The active checkbox is highlighted in green

> The entry for a tool can be locked to prevent accidental changes or deletion.
> - ▶ Tap the **Unlock** symbol next to the entry
> - > The symbol changes and the entry is unlocked

- ▶ Tap **Delete**
- > A message appears
- ▶ Close the message with **OK**
- > The selected tool is deleted from the tool table
- ▶ Tap **Close**
- > The **Tool table** dialog box is closed

Creating a preset table

You can access the preset table on the status bar. The preset table contains the absolute positions of the presets with respect to the reference mark. You can save a maximum of 99 presets in the preset table.

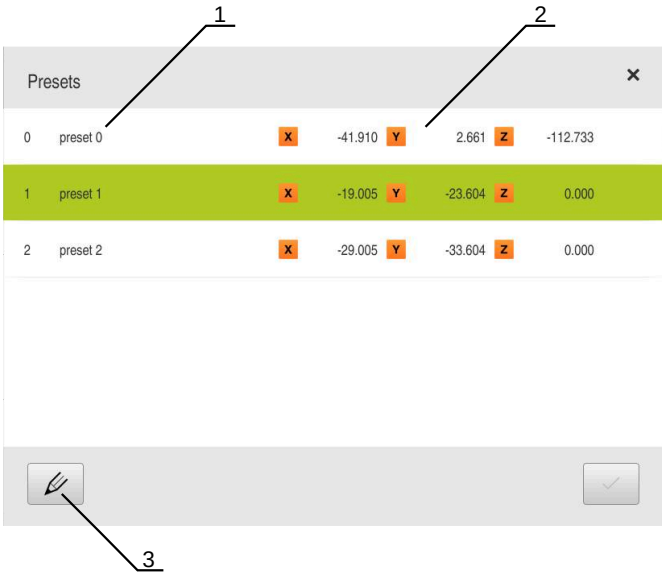

Figure 29: Preset table with absolute positions

1 Designation
2 Coordinates
3 Edit preset table

Defining presets

You can define the preset table in the following ways:

Designation	Description
Probing	Probing of a workpiece with a HEIDENHAIN KT 130 edge finder. The unit automatically transfers the presets into the preset table
Touch-off	Probing a workpiece using a tool. You must define the respective tool position manually as a preset
Numerical input	You must manually enter the numeric value of the preset into the preset table

Depending on the application, users of the type **Operator** define the presets.

Functions for the probing of presets

A wizard assists you in setting presets by probing.

The following functions are available for probing a workpiece:

Icon	Function	Scheme
	Probe the edge of a workpiece (one probing procedure)	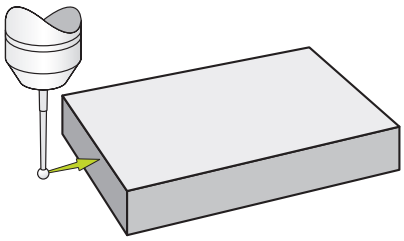
	Determine the centerline of a workpiece (two probing procedures)	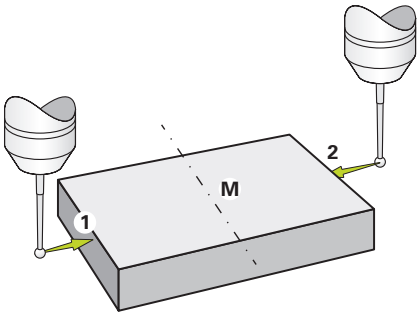
	Determine the center point of a circular form (hole or cylinder) (three probing procedures with tool, four probing procedures with edge finder)	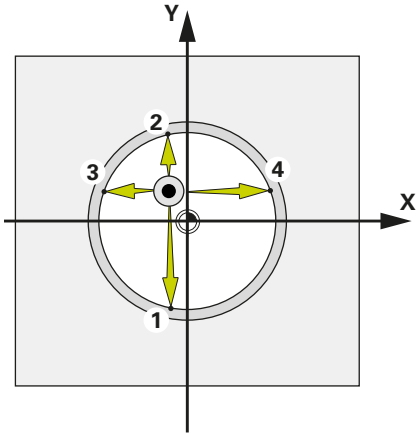

In the Manual operation chapter, you can find various examples for how you can probe a preset.

Probing or touching off of presets

- Tap **Manual operation** in the main menu
- > The user interface for manual operation is displayed
- Tap **Auxiliary functions** in the status bar
- In the dialog box, tap the desired function under **Probing** (e.g., **Probe edge**)
- Select the inserted tool in the **Select the tool** dialog box:
  - When using a HEIDENHAINKT 130 edge finder: Activate **Using touch-probes**
  - When using a tool:
    - Deactivate **Using touch-probes**
    - Enter the desired value in the **Tool diameter** input field

    or
    - Select the corresponding tool from the tool table
- Tap **Confirm** in the wizard
- Follow the instructions in the wizard
- Keep in mind when probing:
  - Move the edge finder toward the workpiece edge until the red LED on the edge finder lights up

  or
  - Move the tool until it touches the workpiece edge
  - Confirm each step in the wizard
  - Retract the edge finder or tool after the last probing operation
- > The **Select preset** dialog appears after the last probing procedure
- Select the desired preset in the **Selected preset** input field:
  - To overwrite an existing preset, select an entry from the preset table
  - To add a new preset, enter a number that has not yet been assigned in the preset table
  - Confirm the entry with **RET**
- Enter the desired value in the **Set position values** input field:
  - Leave the input field empty to load the measured value
  - To define a new value, enter the desired value
  - Confirm the entry with **RET**
- Tap **Confirm** in the wizard
- > The new coordinates are applied as the preset

Manual presetting

If you create presets manually in the preset table, the following applies:

- The entry in the preset table assigns the new position values to the current actual position of the individual axes
- Clearing the entry with **CE** resets the position values for the individual axes to the machine zero point again. The new position values are thus always referenced to the machine zero point

- ▶ Tap **Presets** on the status bar
- > The **Presets** dialog box appears

- ▶ Tap **Edit preset table**
- > The **Preset table** dialog box appears

- ▶ Tap **Add**
- ▶ Enter a name in the **Description** input field
- ▶ Tap the input field for one or more desired axes and enter the appropriate position value
- ▶ Confirm the entry with **RET**
- > The defined preset is added to the preset table

- ▶ To protect the entry for a datum from accidental changes or deletion, tap the **Lock** symbol next to the datum's entry

- > The symbol changes and the entry is locked

- ▶ Tap **Close**
- > The **Preset table** dialog box is closed

Deleting presets

- ▶ In the status bar, tap **Presets**
- > The **Presets** dialog appears

- ▶ Tap **Edit preset table**
- > The **Preset table** dialog box appears

> The entries in the preset table can be locked to prevent accidental modification or deletion. So you might need to unlock an entry first in order to edit it.

- ▶ If necessary, tap **Unlock** at the end of the row

- > The symbol changes and the entry can now be edited
- ▶ To select one or more presets, tap the checkbox in the relevant row
- > The active checkbox is highlighted in green

- ▶ Tap **Delete**
- > A message appears
- ▶ Close the message with **OK**
- > The selected preset(s) is/are deleted from the preset table

- ▶ Tap **Close**
- > The **Preset table** dialog box is closed

8.4 Back up settings

The product's settings can be backed up as a file so that they are available after a reset to the factory default settings has been performed or for installation on multiple units.

- Tap **Settings** in the main menu

- Tap **Service**
- Open in succession:
  - **Back up and restore**
  - **Back up settings**

Performing a Complete backup

During a complete backup of the configuration, all settings of the product are backed up.

- Tap **Complete backup**
- If required, connect a USB mass storage device (FAT32 format) to a USB port of the product .
- Select the folder to which you want to copy the configuration data
- Specify a name for the configuration data, e.g. "<yyyy-mm-dd>_config"
- Confirm the entry with **RET**
- Tap **Save as**
- Tap **OK** to confirm the successful backup of the configuration
> The configuration file was backed up

Further information: "Back up and restore", Page 279

Safely removing a USB mass storage device

- Tap **File management** in the main menu
- Navigate to the list of storage locations
- Tap **Safely remove**
> The message **"The storage medium can be removed now."** appears
- Disconnect the USB mass storage device

8.5 Back up user files

The user files of the product can be backed up as a file to make it available after a reset to the factory default settings. This, together with the backing up of the settings, enables you to back up the complete configuration of your product.

Further information: "Back up settings", Page 129

> All files from all user groups that are stored in the respective folders are backed up and can be restored as user files.
>
> The files in the **System** folder are not restored.

Performing back up

The user files can be backed up as a ZIP file on a USB mass storage device or connected network drive.

- Tap **Settings** in the main menu

- Tap **Service**
- Open in succession:
  - **Back up and restore**
  - **Back up user files**
- Tap **Save as ZIP**
- If required, connect a USB mass storage device (FAT32 format) to a USB port of the product
- Select the folder to which you want to copy the ZIP file
- Specify a name for the ZIP file, e.g. "<yyyy-mm-dd>_config"
- Confirm the entry with **RET**
- Tap **Save as**
- Tap **OK** to confirm successful backup of the user files
- > The user files were backed-up.

Further information: "Back up and restore", Page 279

Safely removing a USB mass storage device

- Tap **File management** in the main menu
- Navigate to the list of storage locations
- Tap **Safely remove**
- > The message **"The storage medium can be removed now."** appears
- Disconnect the USB mass storage device

9

Quick Start

9.1 Overview

This chapter describes the production of an example workpiece. As you produce the example workpiece, this chapter leads you step by step through the product's operating modes based on various machining scenarios. The following machining steps are necessary for successful machining of the flange:

Machining step	Mode of operation
Determine preset 0	Manual operation
Machine a through hole	Manual operation
Machine a rectangular pocket	MDI mode
Machine a fit	MDI mode
Determine preset 1	Manual operation
Machine a bolt hole circle	Programming and program run
Machine a row of holes	Programming and program run

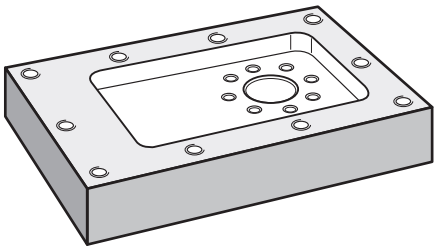

Figure 30: Example workpiece

This chapter does not describe the processing of the outside contour of the example workpiece. It is assumed that the outside contour has already been machined.

For a detailed description of the individual activities, please refer to the chapters "Manual operation", "MDI mode", "Programming" and "Program run".

Make sure that you have read and understood the "Basic operation" chapter before carrying out the actions described below.

Further information: "Basic operation", Page 57

9.2 Logging in for Quick Start

User login

For Quick Start, the **Operator** user must log in.

- Tap **User login** in the main menu
- If required, log out the user who is currently logged in
- Select the **Operator** user
- Tap the **Password** input field
- Enter the password "operator"

> If the password does not match the default password, ask a **Setup** user or **OEM** user for the assigned password.
>
> If the password is no longer known, contact a HEIDENHAIN service agency.

- Confirm entry with **RET**

- Tap **Log in**

9.3 Requirements

To manufacture the aluminum flange, use a manually operated or NC-controlled machine tool. The following dimensioned technical drawing is available for the flange:

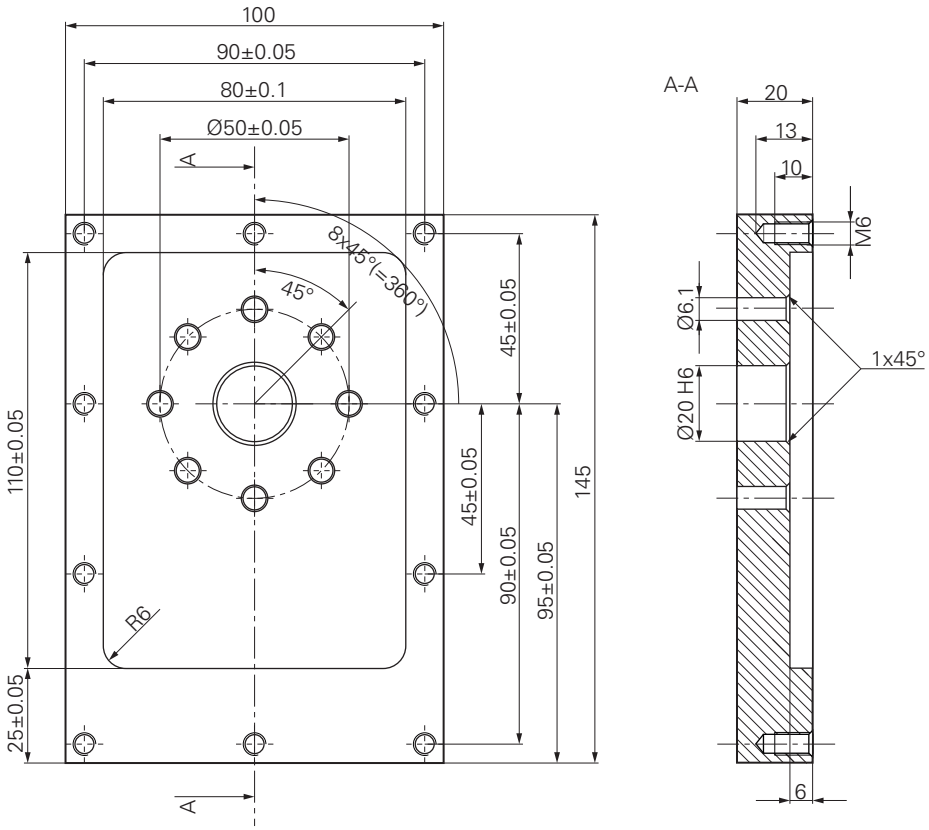

Figure 31: Example workpiece– technical drawing

Machine tool

- The machine tool is switched on
- A pre-processed workpiece blank is clamped on the machine tool

Product

- A spindle axis is configured
- The axes have been homed
  Further information: "Conducting the reference mark search", Page 171
- A HEIDENHAINKT 130 Edge Finder is available

Tools

The following tools are available:

- Drill Ø 5.0 mm
- Drill Ø 6.1 mm
- Drill Ø 19.8 mm
- Reamer Ø 20 mm H6
- End mill Ø 12 mm
- Countersink Ø 25 mm 90°
- M6 tap

Tool table

For the example it is presumed that the tools for machining are not yet defined.

For each tool used, you must therefore define the specific parameters in the tool table of the product. During subsequent machining you can access the parameters in the tool table via the status bar.

Further information: "Creating a tool table", Page 143

- ▶ Tap **Tools** on the status bar
- > The **Tools** dialog box appears

- ▶ Tap **Open table**
- > The **Tool table** dialog box appears

- ▶ Tap **Add**
- ▶ In the **Tool type** input field, enter the name **Drill 5.0**
- ▶ Confirm the entry with **RET**
- ▶ In the **Diameter** input field, enter the value **5.0**
- ▶ Confirm the entry with **RET**
- ▶ In the **Length** input field, enter the length of the drill
- ▶ Confirm the entry with **RET**
- > The defined Ø 5.0 mm drill is added to the tool table
- ▶ Repeat this procedure for the other tools, and use the naming convention **[Type] [Diameter]**

- ▶ Tap **Close**
- > The **Tool table** dialog box is closed

9.4 Determining the preset (manual operation mode)

Initially you need to determine the first preset. Based on this preset the product then calculates all values for the relative coordinate system. Ascertain the preset with the HEIDENHAIN KT 130 Edge Finder.

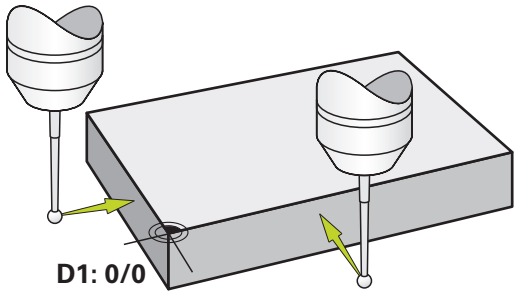

Figure 32: Example workpiece – finding preset D1

Activation

- Tap **Manual operation** in the main menu
- > The user interface for manual operation is displayed

Probing the preset D1

- On the machine tool, insert the HEIDENHAINKT 130 Edge Finder into the spindle and connect it to the product
  Further information: "Configuring a touch probe", Page 98

- Tap **Auxiliary functions** in the status bar

- In the dialog, tap **Probe edge**
- > The **Select the tool** dialog box opens
- In the **Select the tool** dialog, activate the **Using touch-probes** option
- Follow the wizard's instructions and define the preset by probing in the X direction
- Move the edge finder toward the workpiece edge until the red LED on the edge finder lights up
- > The **Select preset** dialog opens
- Retract the edge finder from the workpiece edge
- In the **Selected preset** field, select the preset **0** from the preset table
- In the **Set position values** field enter the value **0** for the X direction and confirm with **RET**

- Tap **Confirm** in the wizard
- > The probed coordinate is loaded in preset **0**
- Repeat the procedure and define the preset in the Y direction via probing

9.5 Machining a through hole (manual operation)

In the first machining step you drill the through hole in manual operation mode using the Ø 5.0 mm drill. You then drill the through hole with the Ø 19.8 mm drill. The values to be entered into the input fields can be taken directly from the dimensioned production drawing.

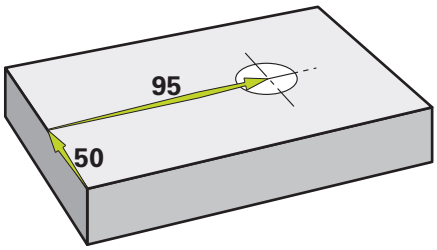

Figure 33: Example workpiece – drilling a through hole

Activation

- Tap **Manual operation** in the main menu
- > The user interface for manual operation is displayed

9.5.1 Predrilling the through hole

- On the machine tool, insert the Ø 5.0 mm drill into the spindle

- Tap **Tools** on the status bar
- > The **Tools** dialog box appears
- Tap **Drill 5.0**

- Tap **Confirm**
- > The associated tool parameters are applied automatically
- > The **Tools** dialog box is closed

- On the product, set a spindle speed of 3500 rpm
- On the machine tool move the spindles as follows:
  - X direction: 95 mm
  - Y direction: 50 mm
- Predrill the through hole
- Move the spindle to a safe position
- Keep positions X and Y
- > You have successfully predrilled the through hole

9.5.2 Boring the through hole

- On the machine tool, insert the Ø 19.8 mm drill into the spindle
- Tap **Tools** on the status bar
- The **Tools** dialog box appears
- Tap **Drill 19.8**
- Tap **Confirm**
- The associated tool parameters are applied automatically
- The **Tools** dialog box is closed
- On the product, set a spindle speed of 400 rpm

- Bore the through hole and retract the spindle
- You have successfully bored the through hole

9.6 Machining a rectangular pocket (MDI mode of operation)

Machine the rectangular pocket in MDI mode of operation. The values to be entered into the input fields can be taken directly from the dimensioned production drawing.

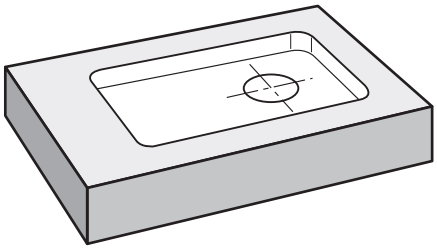

Figure 34: Example workpiece – machining a rectangular pocket

Activation

- Tap **MDI** in the main menu
- The user interface for MDI mode is displayed

9.6.1 Defining the rectangular pocket

- ▶ Tap **Tools** on the status bar
- > The **Tools** dialog box appears
- ▶ Tap **End mill**

- ▶ Tap **Confirm**
- > The associated tool parameters are applied automatically
- > The **Tools** dialog box is closed

- ▶ Move the tool until it touches the surface of the flange
- ▶ Press and hold the **Z** axis key in the position display
- > The product displays 0 with the Z axis

- ▶ Tap **Create** on the status bar
- > A new block is displayed
- ▶ Select the **Rectangular pocket** block type in the **Block type** drop-down list
- ▶ Enter the following parameters according to the dimensional data:
  - **Type of machining**: Full-surface machining
  - **Clearance height**: 10
  - **Depth**: -6
  - **X coordinate of center**: 80
  - **Y coordinate of center**: 50
  - **Side length in X**: 110
  - **Side length in Y**: 80
  - **Direction**: Clockwise
  - **Finishing allowance**: 0.2
  - **Path overlap**: 0.5
- ▶ If the tool axis is NC-controlled, additionally enter the following parameters:
  - **Starting depth**: 0.5
  - **Plunging depth**: 4
  - **Finishing allowance for floor**: 0.1
  - **Feed rate for milling**: 800
  - **Feed rate for plunging**: 260
- ▶ Confirm each entry with **RET**

- ▶ To run the block, tap **END**
- > The positioning aid is displayed
- > If the simulation window is active, the rectangular pocket is visualized

9.6.2 Milling a rectangular pocket

> The values for spindle speed, milling depth and feed rate depend on the end mill's metal-removal rate and the machine tool.

- On the machine tool, insert the Ø 12 mm end mill into the spindle
- On the product, set the spindle speed to a suitable value
- If the product or the machine tool has NC-controlled axes, tap or press the **NC START key**
- Start the machining process—follow the instructions of the wizard
- > The product executes the individual steps of the milling operation
- Tap **Close**
- > Program run is terminated
- > The wizard closes
- > You have successfully machined the rectangular pocket

9.7 Machining a fit (MDI mode of operation)

Machine the fit in MDI mode of operation. The values to be entered into the input fields can be taken directly from the dimensioned production drawing.

> You should chamfer the through hole before reaming. The chamfer enables a better first cut of the reamer and prevents burr formation.

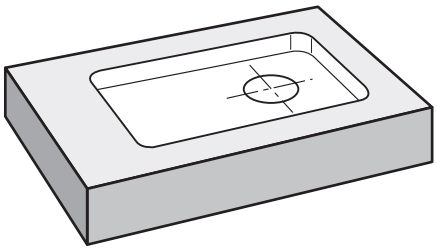

Figure 35: Example workpiece – machining a fit

Activation

- Tap **MDI** in the main menu
- > The user interface for MDI mode is displayed

9.7.1 Defining the fit

- Tap **Tools** on the status bar
- > The **Tools** dialog box appears
- Tap **Reamer**

- Tap **Confirm**
- > The associated tool parameters are applied automatically
- > The **Tools** dialog box is closed

- Tap **Create** on the status bar
- > A new block is displayed
- In the **Block type** drop-down list, select the **Hole** block type
- Enter the following parameters according to the dimensional data:
  - **X coordinate:** 95
  - **Y coordinate:** 50
  - **Z coordinate:** drill through
- If the tool axis is NC-controlled, enter the following parameters:
  - **Z coordinate:** –25
- Confirm each entry with **RET**

- To run the block, tap **END**
- > The positioning aid is displayed
- > If the simulation window is active, the position and traverse path are visualized

9.7.2 Reaming the fit

- On the machine tool, insert the Ø 20 mm H6 reamer into the spindle

- If the product or the machine tool has NC-controlled axes, tap or press the **NC START key**

- On the product, set a spindle speed of 250 rpm
- Start the machining process—follow the instructions of the wizard

- Tap **Close**
- > Program run is terminated
- > The wizard closes
- > You have successfully machined the fit

9.8 Determining the preset (manual operation mode)

To align the bolt hole circle and frame of holes you must set the circle center of the fit as the preset. Based on this preset the product then calculates all values for the relative coordinate system. Ascertain the preset with the HEIDENHAIN KT 130 Edge Finder.

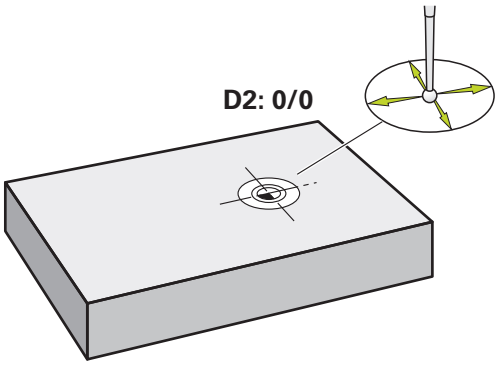

Figure 36: Example workpiece – finding preset D2

Activation

- Tap **Manual operation** in the main menu
- > The user interface for manual operation is displayed

Probing preset D2

- On the machine tool, insert the HEIDENHAIN KT 130 Edge Finder into spindle and connect to the product
  Further information: "Configuring a touch probe", Page 98

- Tap **Auxiliary functions** in the status bar

- Tap **Find circle center** in the dialog
- > The **Select the tool** dialog box opens
- In the **Select the tool** dialog, activate the **Using touch-probes** option
- Follow the instructions of the wizard
- Move the edge finder toward the workpiece edge until the red LED on the edge finder lights up
- > The **Select preset** dialog box opens
- Retract the edge finder from the workpiece edge
- In the **Selected preset** field, select preset **1**
- In the **Set position values** field, enter the value **0** for position value X and position value Y and confirm with **RET**

- Tap **Confirm** in the wizard
- > The probed coordinates are loaded in preset **1**

Activating the preset

- Tap **Presets** on the status bar
- > The **Presets** dialog opens
- Tap preset **1**
- Tap **Confirm**
- > The preset is set
- > On the status bar, **1** is displayed for the preset

9.9 Programming a bolt hole circle and row of holes (programming)

Machine the bolt hole circle and row of holes in Programming mode of operation. You may be able to reuse the program in a small batch production. The values to be entered into the input fields can be taken directly from the dimensioned production drawing.

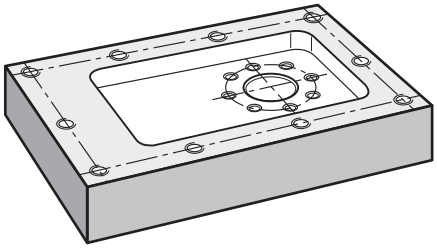

Figure 37: Example workpiece – programming a bolt hole pattern and a row of holes

Calling up

- Tap **Programming** in the main menu
- > The user interface for programming is displayed

9.9.1 Creating the program header

- Tap **Create new program** in the program management
- > A dialog box is opened.
- In the dialog select the storage location, e.g. **Internal/Programs** in which you want to save the program
- Enter a name for the program
- Confirm the entry with **RET**
- Tap **Create**
- > A new program containing the **Program header** start block is created
- In **Name** enter the name **Example**
- Confirm the entry with **RET**
- In **Unit for linear values** select the **mm** unit of measure
- > The program has been successfully created; you can then begin with programming

9.9.2 Programming the tool

- Tap **Add block** on the toolbar
- > A new block is inserted below the current position
- In the **Block type** drop-down list, select the **Tool call** block type

- Tap **Tool number**
- > The **Tools** dialog box appears
- Tap **Drill 6.1**
- > The associated tool parameters are applied automatically
- > The **Tools** dialog box is closed

- Tap **Add block** on the toolbar
- > A new block is inserted below the current position
- In the **Block type** drop-down list, select the **Spindle speed** block type
- In **Spindle speed**, enter the value **3000**
- Confirm the entry with **RET**

9.9.3 Programming the bolt hole circle

- Tap **Add block** on the toolbar
- > A new block is inserted below the current position
- In the **Block type** drop-down list, select the **Bolt hole circle** block type
- Enter the following values:
  - **Number of holes**: 8
  - **X coordinate of center**: 0
  - **Y coordinate of center**: 0
  - **Radius**: 25
  - **Starting angle**: 0°
  - **Stepping angle**: full circle
  - **Depth**: -25
- If the tool axis is NC-controlled, additionally enter the following parameters:
  - **Clearance height**: 10
  - **Feed rate**: 2000
  - **Feed rate for plunging**: 600
- Confirm each entry with **RET**

- Tap **END** to terminate the input process

- Tap **Save program** in the program management
- > The program is saved

9.9.4 Programming the tool

- Tap **Add block** on the toolbar
- > A new block is inserted below the current position
- In the **Block type** drop-down list, select the **Tool call** block type
- Tap **Tool number**
- > The **Tools** dialog box appears
- Tap **Drill 5.0**
- > The associated tool parameters are applied automatically
- > The **Tools** dialog box is closed
- Tap **Add block** on the toolbar
- > A new block is inserted below the current position
- In the **Block type** drop-down list, select the **Spindle speed** block type
- In **Spindle speed**, enter the value **3000**
- Confirm the entry with **RET**

9.9.5 Programming the row of holes

- Tap **Add block** on the toolbar
- > A new block is inserted below the current position
- In the **Block type** drop-down list, select the **Row of holes** block type
- Enter the following values:
  - **X coordinate of 1st hole**: -90
  - **Y coordinate of 1st hole**: -45
  - **Holes per row**: 4
  - **Hole spacing**: 45
  - **Angle**: 0°
  - **Depth**: -13
  - **Number of rows**: 3
  - **Row spacing**: 45
  - **Fill mode**: bolt hole circle
- If the tool axis is NC-controlled, additionally enter the following parameters:
  - **Clearance height**: 10
  - **Feed rate**: 2000
  - **Feed rate for plunging**: 600
- Confirm each entry with **RET**
- Tap **Save program** in the program management
- > The program is saved

9.9.6 Simulating program run

After you have successfully programmed the bolt hole circle and row of holes, you can simulate how the program will run by means of the simulation window.

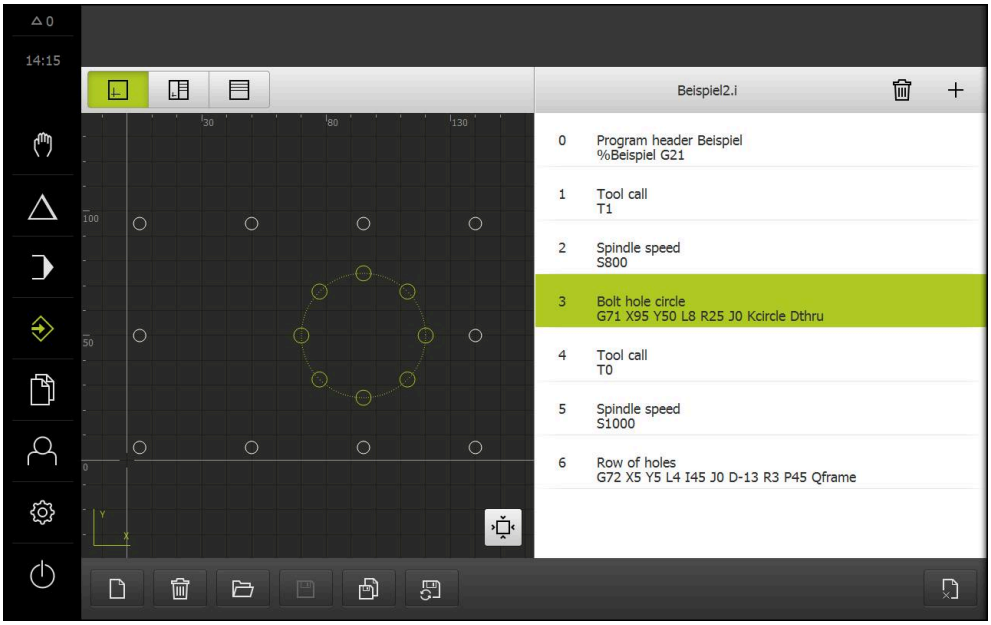

Figure 38: Example workpiece – simulation window

- ▶ Tap **Simulation window**
- > The simulation window is displayed
- ▶ Tap each program block, one after the other
- > The tapped machining step is shown in color in the simulation window
- ▶ Check the view for programming errors, e.g. tool path intersections of holes
- > If there are no programming errors you can machine the bolt hole circle and row of holes

9.10 Machining a bolt hole circle and row of holes (Program run)

You have defined the single machining steps for bolt hole circle and row of holes in a program. You can execute the created program in Program run.

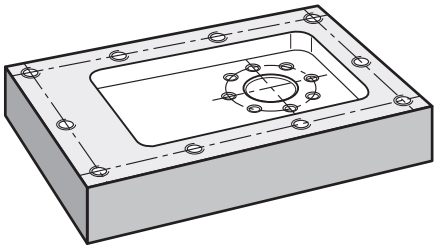

Figure 39: Example workpiece – drilling a bolt hole pattern and a row of holes

9.10.1 Opening the program

- ▶ Tap **Program run** in the main menu
- > The user interface for Program Run is displayed

- ▶ Tap **Open program** in the program management
- > A dialog box is opened.
- ▶ Select the **Internal/Programs** storage location in the dialog
- ▶ Tap the file **Example.i**
- ▶ Tap **Open**
- > The selected program is opened

9.10.2 Running the program

- ▶ On the machine tool, insert the Ø 6.1 mm drill into the spindle

- ▶ Tap **NC START** on the program control

or

- ▶ On the machine tool: Press the **NC START** key
- > The product selects the first tool call block of the program
- > The wizard displays the relevant instructions

- ▶ Tap **NC START** again to begin machining

or

- ▶ On the machine tool: Press the **NC START** key
- > The spindle speed is set and the first machining block for bolt hole circle is selected
- > The single steps of the bolt hole circle machining block are displayed
- ▶ Tap **NC START** to move the axis

or

- ▶ On the machine tool: Press the **NC START** key
- > A movement is executed
- ▶ Depending on the machine tool, carry out user intervention, e.g. manually move the Z axis when drilling through

- Call the next step of the bolt hole circle machining block with **Next**
- > The next step is called
- Tap **NC START** to execute the next movement

or

- On the machine tool: Press the **NC START** key
- Follow the instructions of the wizard
- After executing all steps in the bolt hole circle machining block, tap **Next program step**
- > The next machining block, row of holes, is selected
- > The single steps of the row of holes machining block are displayed
- On the machine tool, insert the Ø 5.0 mm drill into the spindle
- Repeat the process for the row of holes machining block
- After drilling the row of holes tap **Close**
- > Machining is terminated
- > The program is reset
- > The wizard is closed

10

Manual operation

10.1 Overview

This chapter describes the Manual operation mode and how to execute simple machining operations in this mode on a workpiece.

> Make sure that you have read and understood the "Basic operation" chapter before carrying out the actions described below.
>
> **Further information:** "Basic operation", Page 57

Short description

By traversing the reference marks on the encoder scales, you make it possible to define an absolute position. When you have completed the reference mark search in Manual mode, you then set the presets that will be used as the basis for machining the workpiece in accordance with the drawing.

> Presetting in the Manual Operation mode is required in order to use the product in MDI mode.

> The reference mark search does not need to be performed for serial encoders with EnDat interface, because the axes are automatically homed.

Position measurement and tool selection for simple machining operations are described below.

Activation

- Tap **Manual operation** in the main menu
- > The user interface for manual operation is displayed

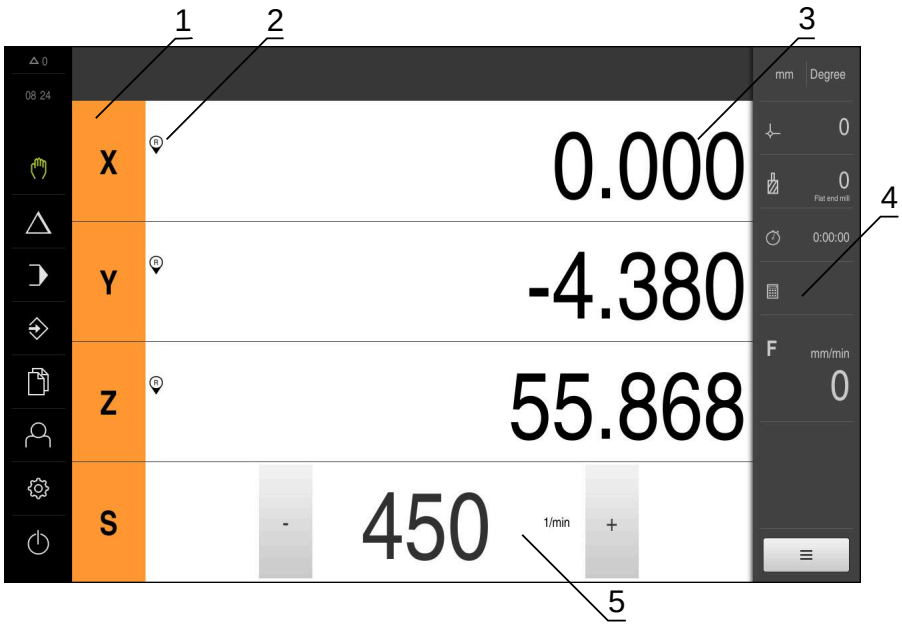

Figure 40: **Manual operation** menu

1 Axis key
2 Reference
3 Position display
4 Status bar
5 Spindle speed (machine tool)

10.2 Conducting the reference mark search

With the help of reference marks, the unit can assign axis positions of the encoder to the machine.

If no reference marks for the encoder are provided by a defined coordinate system, you need to perform a reference mark search before you start measuring.

> If the reference mark search after unit start is active, then all of the unit's functions will be disabled until the reference mark search has been successfully completed.
>
> **Further information:** "Reference marks (Encoder)", Page 259

> The reference mark search does not need to be performed for serial encoders with EnDat interface, because the axes are automatically homed.

If the reference mark search is active on the unit, then a wizard will ask you to traverse the reference marks of the axes.

- ▶ After logging in, follow the instructions of the wizard
- > The Reference symbol stops blinking upon successful completion of the reference mark search

Further information: "Operating elements of the position display", Page 78

Further information: "Activating the reference mark search", Page 114

Starting the reference mark search manually

If the reference mark search was not performed on startup, you can start it manually later.

- ▶ Tap **Manual operation** in the main menu
- > The user interface for manual operation is displayed

- ▶ Tap **Auxiliary functions** in the status bar

- ▶ Tap **Reference marks**
- > Existing reference marks are cleared
- > The Reference symbol blinks
- ▶ Follow the instructions of the wizard
- > The Reference symbol stops blinking upon successful completion of the reference mark search

10.3 Defining presets

You can define presets on a workpiece in the Manual Operation mode in the following ways:

- Probe a workpiece with a HEIDENHAIN KT 130 Edge Finder. Use this method to automatically enter the presets into the preset table.
- Probing a workpiece with a tool (touch-off). Use this method to define the respective tool position as a datum.
- Move to the position and set it as a preset, or overwrite position value

> The setup engineer (**Setup**) may have already made settings in the datum table.
>
> **Further information:** "Creating a preset table", Page 145

> When touching the workpiece with a tool, the product uses the parameters stored in the tool table.
>
> **Further information:** "Creating a tool table", Page 143

Requirement:

- A workpiece is clamped on the machine tool
- The axes have been homed

10.3.1 Functions for the probing of presets

A wizard assists you in setting presets by probing.

The following functions are available for probing a workpiece:

Icon	Function	Scheme
	Probe the edge of a workpiece (one probing procedure)	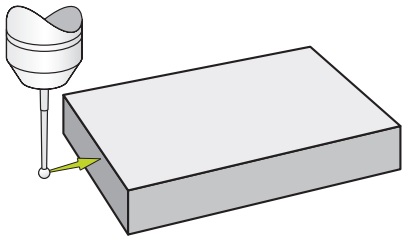
	Determine the centerline of a workpiece (two probing procedures)	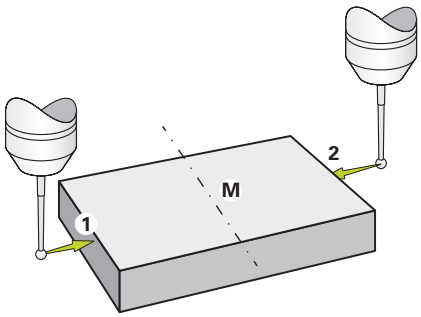
	Determine the center point of a circular form (hole or cylinder) (three probing procedures with tool, four probing procedures with edge finder)	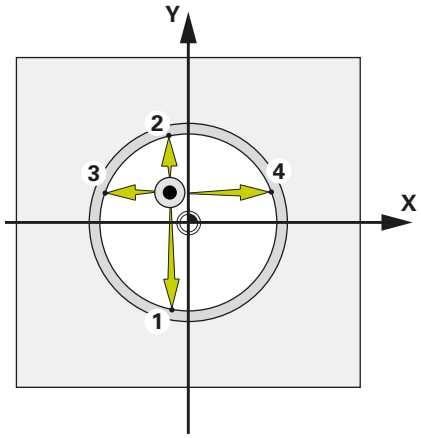

10.3.2 Probing or touching off of presets

- Tap **Manual operation** in the main menu
- > The user interface for manual operation is displayed
- Tap **Auxiliary functions** in the status bar
- In the dialog box, tap the desired function under **Probing** (e.g., **Probe edge**)
- Select the inserted tool in the **Select the tool** dialog box:
  - When using a HEIDENHAINKT 130 edge finder: Activate **Using touch-probes**
  - When using a tool:
    - Deactivate **Using touch-probes**
    - Enter the desired value in the **Tool diameter** input field

    or
    - Select the corresponding tool from the tool table
- Tap **Confirm** in the wizard
- Follow the instructions in the wizard
- Keep in mind when probing:
  - Move the edge finder toward the workpiece edge until the red LED on the edge finder lights up

  or
  - Move the tool until it touches the workpiece edge
  - Confirm each step in the wizard
  - Retract the edge finder or tool after the last probing operation
- > The **Select preset** dialog appears after the last probing procedure
- Select the desired preset in the **Selected preset** input field:
  - To overwrite an existing preset, select an entry from the preset table
  - To add a new preset, enter a number that has not yet been assigned in the preset table
  - Confirm the entry with **RET**
- Enter the desired value in the **Set position values** input field:
  - Leave the input field empty to load the measured value
  - To define a new value, enter the desired value
  - Confirm the entry with **RET**
- Tap **Confirm** in the wizard
- > The new coordinates are applied as the preset

10.3.3 Example 1: Setting a preset on a corner

The following probing steps are necessary in order to set the preset on a corner of the workpiece:

Probing function	steps	Figure
	▶ Probe the edge in the Y+ direction	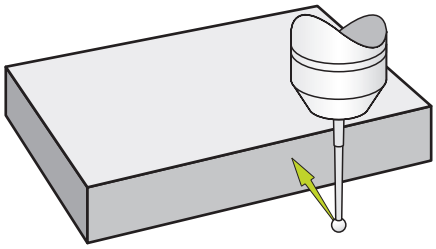
	▶ Probe the edge in the X+ direction	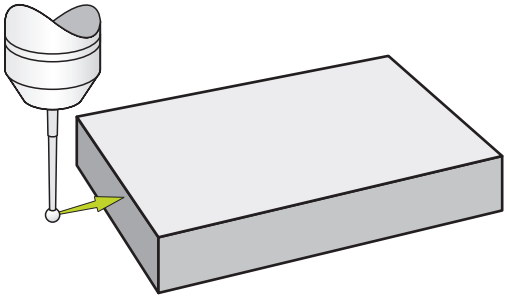
	▶ Probe the edge in the Z– direction	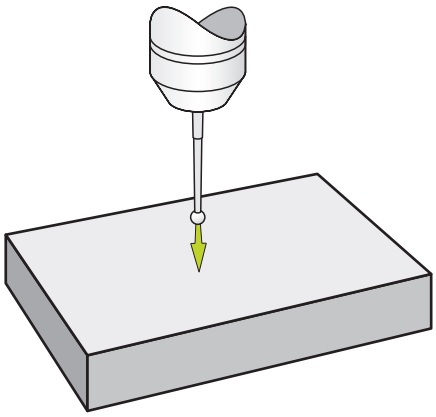
	> The product defines the preset on the corner of the workpiece	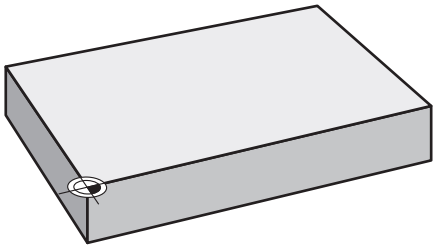

10.3.4 Example 2: Setting a preset centered on an edge

The following probing steps are necessary in order to set the preset centered on the edge of the workpiece:

Probing function	steps	Figure
	▶ Probe the edge in the Y+ direction	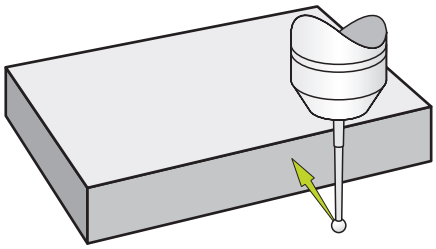
	▶ Probe the edges in the X+ direction and X– direction	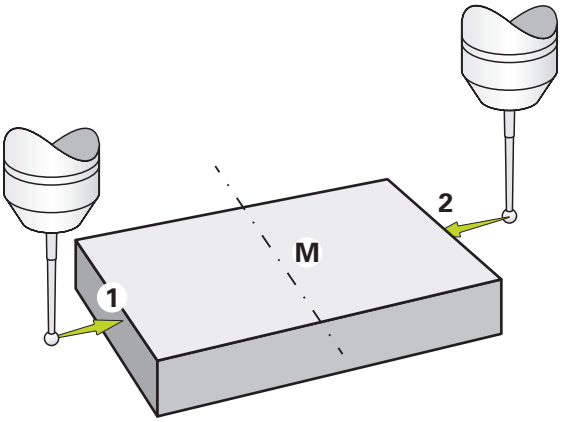
	▶ Probe the edge in the Z– direction	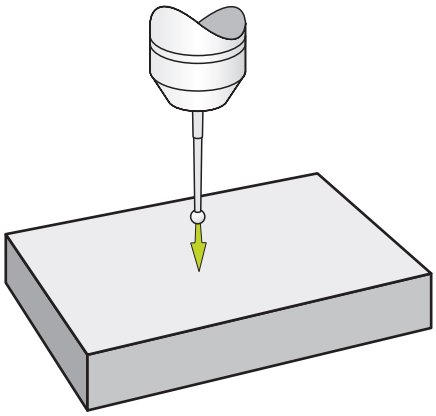
	> The products defines the preset centered on the edge of the workpiece	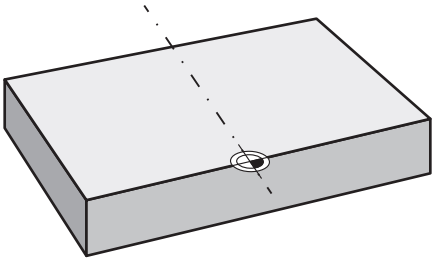

10.3.5 Example 3: Setting a preset on a circle center

The following probing steps are necessary in order to set the preset on a circle center of the workpiece:

Probing function	steps	Figure
◯	▶ Probe the hole at four points	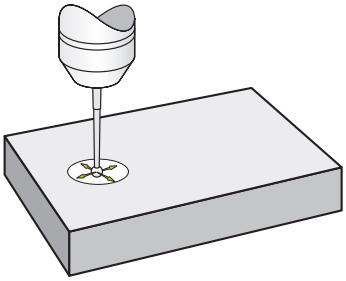
／	▶ Probe the edge in the Z–direction	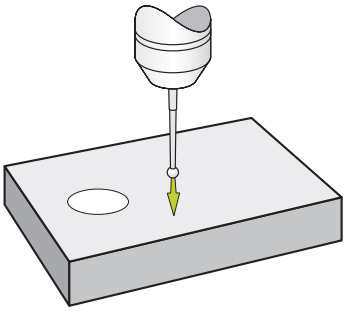
	> The product defines the preset centered in the hold of workpiece	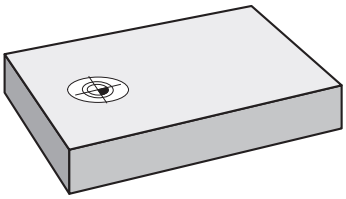

10.3.6 Example 4: Setting a preset in the middle of the workpiece

The following probing steps are required in order to set the preset in the middle of the workpiece:

Probing function	steps	Figure
	▶ Probe the edges in Y+ direction and the Y– direction	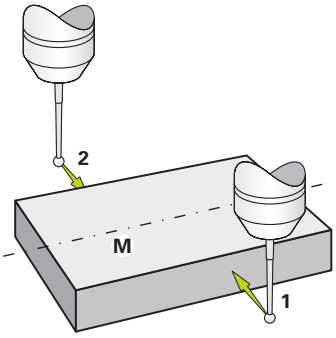
	▶ Probe the edges in the X+ direction and X– direction	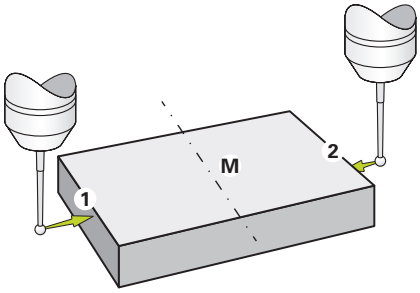
	▶ Probe the edge in the Z– direction	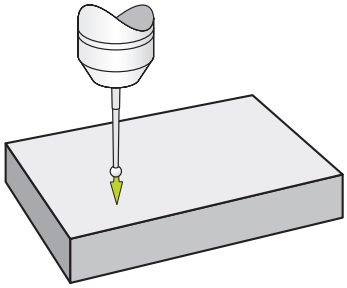
	> The product defines the preset in the middle of the workpiece	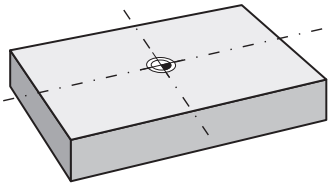

10.3.7 Setting a position as a preset

For simple machining operations, you can use the current position as a preset and perform simple position calculations.

Prerequisite:

- A workpiece is clamped on the machine tool
- The axes are referenced

> In a system with reference marks, zeroing and presetting are only possible after a reference run has been performed.
>
> After a restart of the device, it would not be possible to determine the position of the presets without such a reference. In addition, the preset table would lose its validity without referencing, since it would not be possible to approach the stored points correctly.
>
> **Further information:** "Conducting the reference mark search", Page 171

Setting the current position as preset

- ▶ Approach the desired position
- ▶ Long-press the **axis key**
- > The active preset in the preset table is overwritten with the current position
- > The active preset is applied as the new value
- ▶ Perform the desired machining operation

Defining the position values of the current position

- ▶ Approach the desired position
- ▶ In the working space, tap the **axis key** or the position value
- ▶ Enter the desired position value
- ▶ Confirm the entry with **RET**
- > The position value is applied to the current position
- > The entered position value is linked with the current position and overwrites the active preset in the preset table
- > The active preset is applied as the new value
- ▶ Perform the desired machining operation

10.4 Creating a tool

In the Manual Operation mode, you can enter the tools you want to use into the tool table.

> The setup engineer (**Setup**) may have already made the settings in the tool table.
>
> **Further information:** "Creating a tool table", Page 143

- A workpiece is clamped on the machine tool
- The axes have been homed

- ▶ Tap **Tools** on the status bar
- > The **Tools** dialog box appears

- ▶ Tap **Open table**
- > The **Tool table** dialog box appears

- ▶ Tap **Add**
- ▶ Enter a name in the **Tool type** input field
- ▶ Confirm the entry with **RET**
- ▶ Tap the input fields one after the other, and enter the corresponding values
- ▶ Change the unit of measure in the selection menu, if required
- > The entered values are converted
- ▶ Confirm the entry with **RET**
- > The defined tool is added to the tool table

- ▶ To protect the entry for a tool from accidental changes or deletion, tap the **Lock** symbol next to the tool's entry

- > The symbol changes and the entry is locked

- ▶ Tap **Close**
- > The **Tool table** dialog box is closed

10.5 Selecting a tool

The currently selected tool is displayed on the status bar. Here you can also access the tool table where you can select the tool you want to use. The associated tool parameters are applied automatically.

The product provides a tool radius compensation feature that enables you to directly enter the workpiece dimensions as specified in the drawing. During machining, the product will then automatically display a traverse path that is increased (R+) or decreased (R–) by the tool radius.

> The setup engineer (**Setup**) may have already made the settings in the tool table.
>
> **Further information:** "Creating a tool table", Page 143

- ▶ Tap **Tools** on the status bar
- > The **Tools** dialog box appears
- ▶ Tap the tool you want to use
- ▶ Tap **Confirm**
- > The associated tool parameters are applied automatically
- > The selected tool is shown on the status bar
- ▶ Mount the desired tool on the machine tool

11

MDI mode

11.1 Overview

This chapter describes the Manual Data Input (MDI) operating mode and how to execute machining steps in single blocks in this mode.

> Make sure that you have read and understood the "Basic operation" chapter before carrying out the actions described below.
>
> **Further information:** "Basic operation", Page 57

Short description

MDI mode allows you to execute one machining block at a time. The values to be entered can be applied directly in the input field from a properly dimensioned production drawing.

> Before you can use the product in the MDI mode, the presets must be set in the Manual Operation mode.
>
> **Further information:** "Defining presets", Page 172

The functions provided by MDI mode enable efficient single-part production. For small-batch production, you can program the machining steps in Programming mode and then execute them in Program run mode.

Further information: "Programming", Page 205

Further information: "Program run", Page 197

Calling up

- Tap **MDI** in the main menu

- Tap **Create** on the status bar
- The user interface for MDI mode is displayed

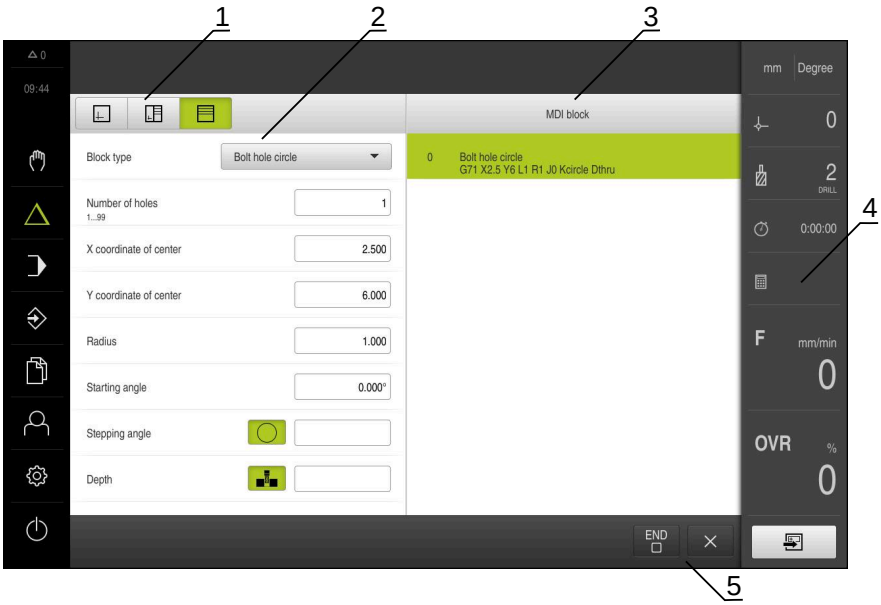

Figure 41: **MDI** menu

1 View bar
2 Block parameters
3 MDI block
4 Status bar
5 Block tools

11.2 Block types

You can use the following block types for machining in the MDI mode:

- Positioning functions
- Machining pattern

11.2.1 Positioning

You can manually define position values for positioning. Depending on the configuration of the connected machine tool, you can then move the tool to these positions either automatically or manually.

The following parameters are available:

Positioning block type

Parameter	Description
R0	Tool radius compensation disabled (default setting)
R+	Positive tool radius compensation; the traverse path is increased by the tool radius (outside contour)
R–	Negative tool radius compensation; the traverse path is decreased by the tool radius (inside contour)
I	Incremental position value, i.e. the position value is referenced to the actual position
	Through-hole drilling without a specified position value (only for a manually operated Z axis)

11.2.2 Machining pattern

You can define various machining patterns to machine complex shapes. From the data you enter, the product calculates the geometry of the machining patterns and optionally displays them in the simulation window.

The machining patterns are applicable only if the Z axis is perpendicular. If the tool axis is not perpendicular, then the values defined in the machining patterns do not apply anymore.

> Before defining a machining pattern, you must
> - Define a suitable tool in the tool table
> - Select the tool on the status bar
>
> **Further information:** "Creating a tool table", Page 143

Actual position

Applies the current axis position to the input fields of the various block types

Hole block

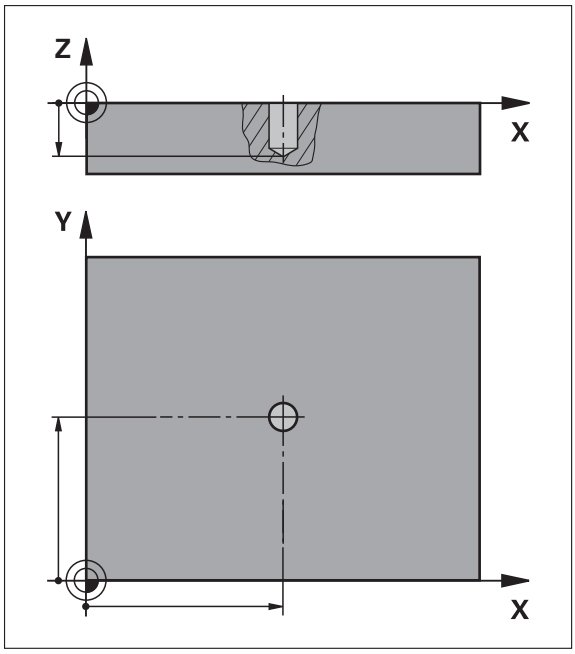

Figure 42: Schematic depiction of the **Hole** block

Parameter	Description
X	Center point of the hole in the X plane
Y	Center point of the hole in the Y plane
Depth 	Target depth for drilling in the Z plane Default: Through-hole drilling (not available for an NC-controlled Z axis)
Clearance height	Starting depth in the tool axis (only for an NC-controlled Z axis)
Feed rate	Speed of the tool axis (only for an NC-controlled Z axis)
Feed rate for plunging	Speed of the tool axis for downfeed (only for an NC-controlled Z axis)

Bolt hole circle block

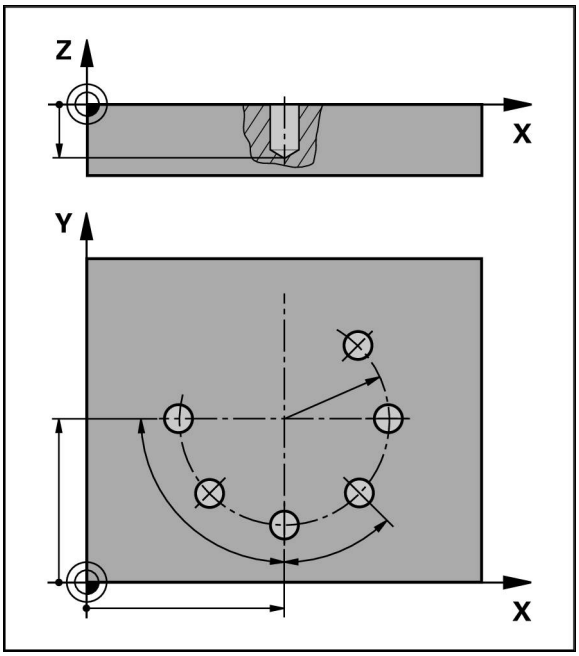

Figure 43: Schematic display of the bolt hole circle block

Parameter	Description
Number of holes	Number of holes
X coordinate of center	Center of the bolt hole arc in the X plane
Y coordinate of center	Center of the bolt hole arc in the Y plane
Radius	Radius of the bolt hole arc
Starting angle	Angle of the 1st hole of the bolt hole arc
Stepping angle 	Angle of the circle segment Default: bolt hole circle
Depth 	Target depth for drilling in the Z plane Default: Through-hole drilling (not available for an NC-controlled Z axis)
Clearance height	Starting depth for milling in the tool axis (only for NC-controlled Z axis)
Feed rate	Traversing speed of the tool axis (only for NC-controlled Z axis)
Feed rate for plunging	Traversing speed of the tool axis for plunging (only for NC-controlled Z axis)

Row of holes block

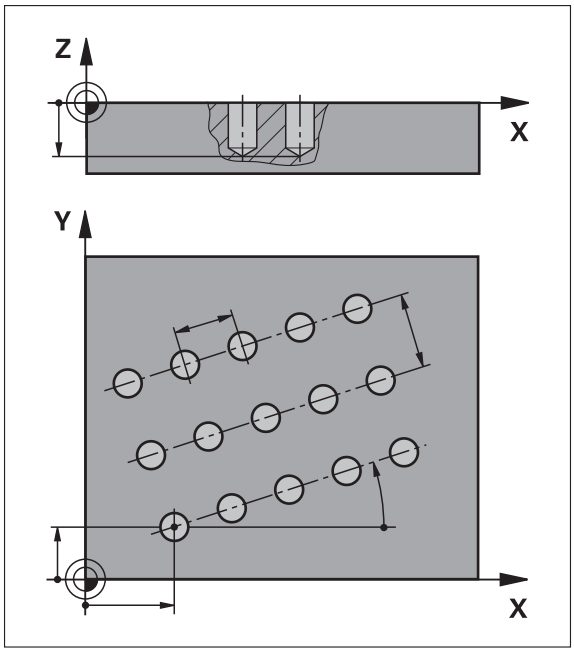

Figure 44: Schematic display of the row of holes block

Parameter	Description
X coordinate of 1st hole	1st hole of the linear hole pattern in the X plane
Y coordinate of 1st hole	1st hole of the linear hole pattern in the Y plane
Holes per row	Number of holes per row
Hole spacing	Spacing or offset between the individual holes of a row
Angle	Rotation angle of the row of holes
Depth 	Target depth for drilling in the Z plane Default: Through-hole drilling (not available for an NC-controlled Z axis)
Number of rows	Number of rows of holes in the linear hole pattern
Row spacing	Spacing between the individual rows of holes
Fill mode 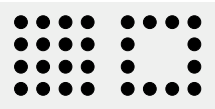	Distribution of holes ■ All holes ■ Frame of holes
Clearance height	Starting depth for milling in the tool axis (only for NC-controlled Z axis)
Feed rate	Traversing speed of the tool axis (only for NC-controlled Z axis)
Feed rate for plunging	Traversing speed of the tool axis during plunging (only for NC-controlled Z axis)

Rectangular pocket block

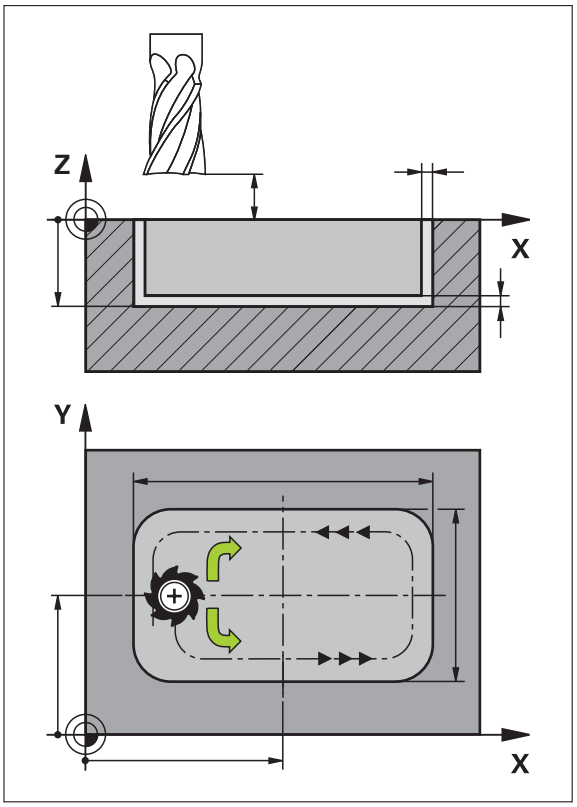

Figure 45: Schematic display of the rectangular pocket block

Parameter	Description
Type of machining 	Type of machining you want to use to create the rectangular pocket: ■ Full-surface machining (roughing and finishing) ■ Roughing ■ Finishing
Clearance height	Z plane above the workpiece in which the tool is allowed to move at maximum speed; corresponds to the starting position and the end position in the NC-controlled tool axis
Depth 	Target depth for milling in the tool axis Default: Through-hole drilling (not available for an NC-controlled Z axis)
X coordinate of center	Center of the rectangular pocket in the X plane
Y coordinate of center	Center of the rectangular pocket in the Y plane
Side length in X	Length of the rectangular pocket in the X-axis direction
Side length in Y	Length of the rectangular pocket in the Y-axis direction

Parameter	Description
Direction 	Direction in which the rectangular pocket is roughed out (clockwise or counterclockwise) Default: counterclockwise
Finishing allowance	Amount of material that is to be left remaining around the rectangular pocket and will be removed in the last pass
Path overlap 0.0001 x R ... 1.4100 x R	The path overlap factor is the value by which the tool overlaps in the directly previously milled path when clearing out a working plane Default: 0.5
Starting depth	Starting depth for milling in the tool axis (only for NC-controlled Z axis)
Plunging depth	Plunging depth in the tool axis (only for NC-controlled Z axis)
Finishing allowance for floor	The finishing allowance for floor is the amount of material that is to be left remaining on the floor of the rectangular pocket. It will be removed in the last pass. If no finishing allowance for floor is specified, the value of the finishing allowance for side is used. (only with an NC-controlled Z axis)
Feed rate for milling	Traversing speed of the tool axis during milling (only for NC-controlled Z axis)
Feed rate for plunging	Traversing speed of the tool axis during plunging (only for NC-controlled Z axis)

When machining a rectangular pocket in MDI and Program Run modes of operation, the following applies:

- Approaching the starting position is at clearance height at rapid traverse
- If a target depth was defined, positioning is at **Clearance height** at the end of the machining operation

Types of machining for a rectangular pocket

You can select between three types of machining:

- Full-surface machining
- Roughing
- Finishing

Full-surface machining (roughing and finishing)

- In each plane, roughing is performed up to the entered **Finishing allowance**
- The **Finishing allowance** is used as the basis for finishing the target contour

The rectangular pocket is machined as follows:

- Roughing and finishing of plane 1
- Roughing and finishing of planes 2 ... n + finishing of the floor

Roughing

- In each plane, roughing is performed up to the entered **Finishing allowance** and **Finishing allowance for floor**

Finishing

- The **Finishing allowance** is used as the basis for finishing the target contour
- In the final finishing run, the floor of the rectangular pocket is finished to the target depth

11.3 Executing blocks

You can execute a positioning function or select a machining pattern and execute this block.

> If enabling signals are missing, the running program is halted and the drives of the machine are stopped.
>
> **Further information:** Manufacturer's documentation for the machine

Executing blocks

- ▶ Tap **Create** on the status bar
- > A new block is displayed

or

- > The last programmed MDI block is loaded along with all of its parameters
- ▶ Select the desired block type from the **Block type** drop-down list
- ▶ Based on the block type, define the relevant parameters
- ▶ To load the current axis position, tap **Actual position capture** in the appropriate input fields
- ▶ Confirm each input with **RET**
- ▶ To execute the block, tap **END**
- > The positioning aid is displayed
- > If the simulation window is activated, the current block is visualized
- > Depending on the block, user intervention may be required; the wizard will display the relevant instructions
- ▶ Follow the instructions in the wizard
- ▶ If you are using NC-controlled axes, then tap or press **NC START** on the product or machine tool
- ▶ In multi-step blocks, tap **Next** to jump to the next instruction

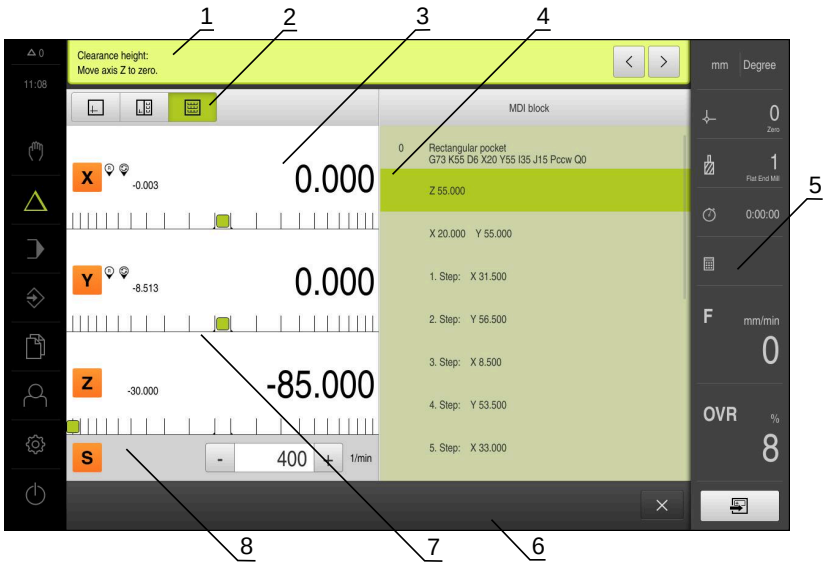

Figure 46: Example of a block in **MDI** mode

1 Wizard
2 View bar
3 Distance-to-go display
4 MDI block
5 Status bar
6 NC START key
7 Positioning aid
8 Spindle speed (machine tool)

11.4 Using the simulation window

You can display a visualization of the selected block in the optional simulation window.

The following options are available on the view bar:

Operating element	Function
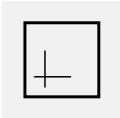	**Graphic** Display of simulation and blocks
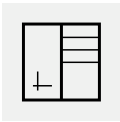	**Graphic-Position** Display of simulation, parameters (position values for program run, if required) and blocks
	**Position** Display of parameters (position values for program run, if required) and blocks

11.4.1 Depiction as contour view

The simulation window displays a contour view. The contour view aids in the precise positioning of the tool or with contour tracking in the machining plane.

The contour view uses the following colors (defaults):

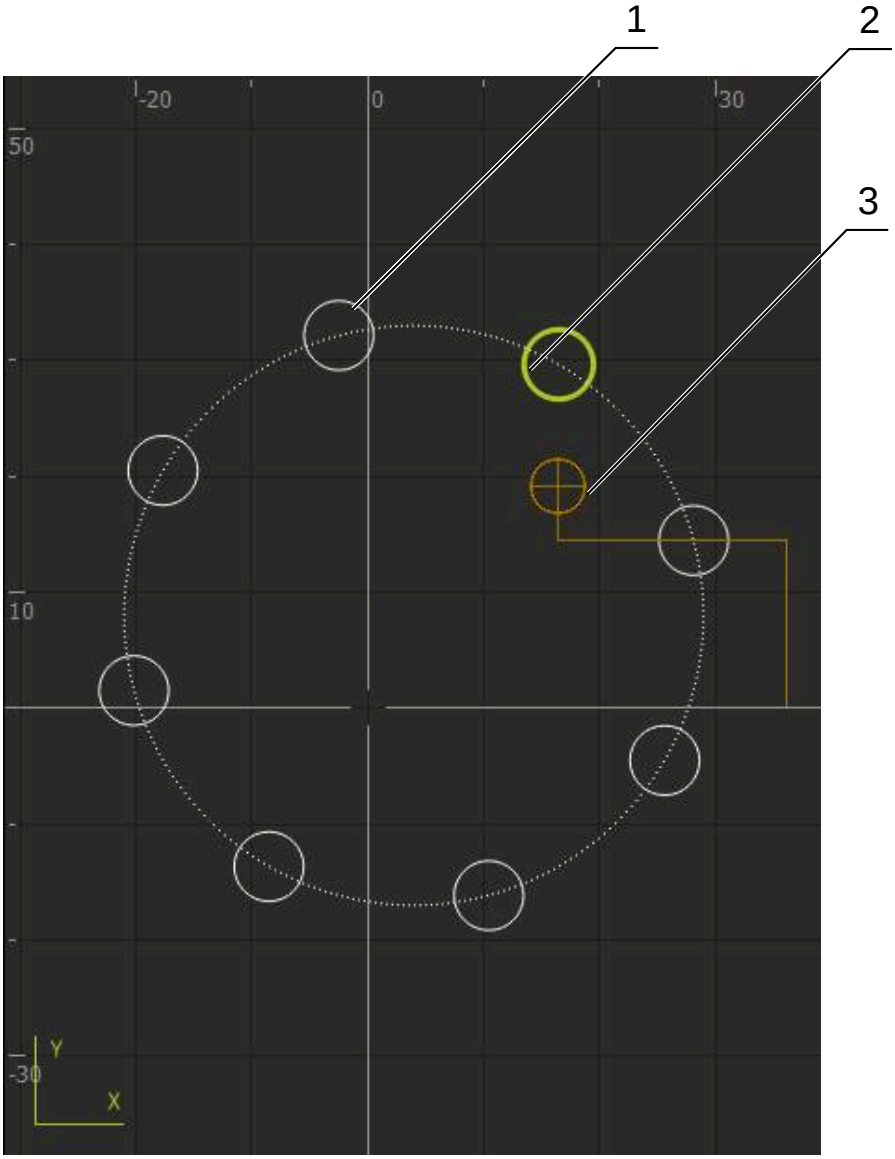

Figure 47: Simulation window with contour view

1 Machining pattern (white)
2 Current block or machining position (green)
3 Tool contour, tool position and tool path (orange)

Activating the simulation window

- Tap **Graphic-Position**
- > The simulation window for the currently selected block appears

- Tap **Graphic** on the view bar to enlarge the simulation window
- > The parameter view is hidden and the simulation window is enlarged

11.5 Working with the positioning aid

During positioning to the next nominal position, the product assists you by displaying a graphic positioning aid ("traversing to zero"). A scale is shown underneath each axis you traverse to zero. The graphic positioning aid is a small square that symbolizes the target position of the tool.

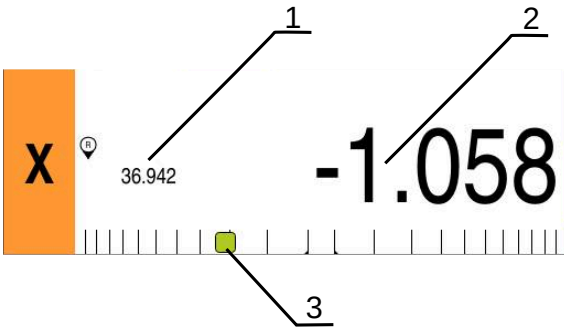

Figure 48: **Distance to go with position** view with graphical positioning aid

1 Actual value
2 Distance-to-go
3 Positioning aid

The positioning aid moves across the measuring scale when the tool center is located within a range of ± 5 mm of the nominal position. The color also changes in the following way:

Display of positioning aid	Meaning
Red	The tool center is moving away from the nominal positions
Green	The tool center is moving toward the nominal position

11.6 Applying the Scaling factor

If a scaling factor is activated for one or more axes, this scaling factor is multiplied by the stored nominal position during execution of a block. This enables you to mirror and scale a block.

You can activate a scaling factor in the quick access menu.

Further information: "Adjusting settings in the quick access menu", Page 81

Example:

The following **MDI block** is programmed:

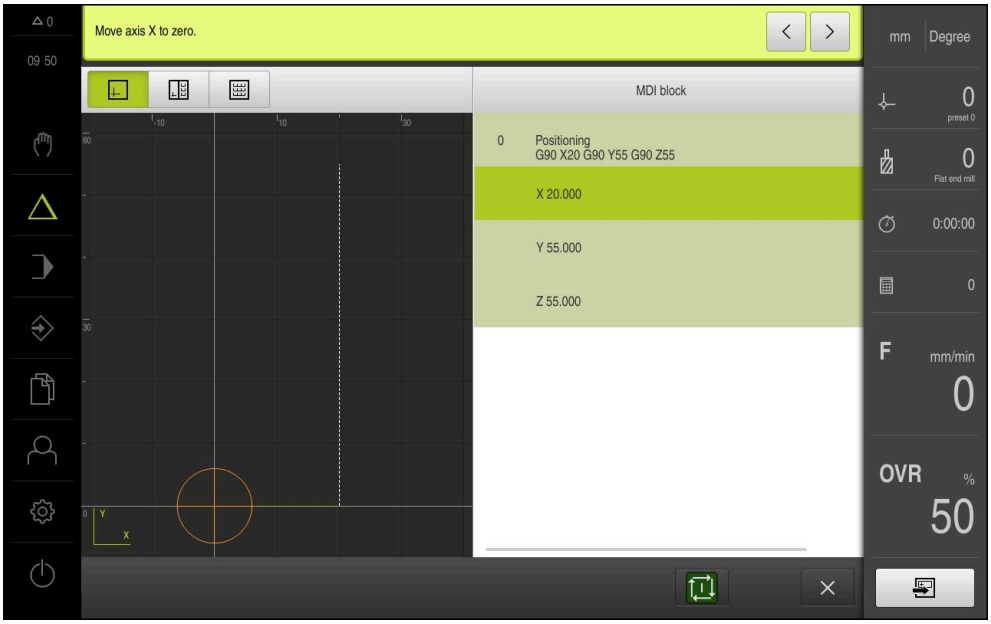

Figure 49: Example – MDI block

A **Scaling factor** of **-0.5** is activated for the **X** axis. The following **MDI block** will therefore be executed:

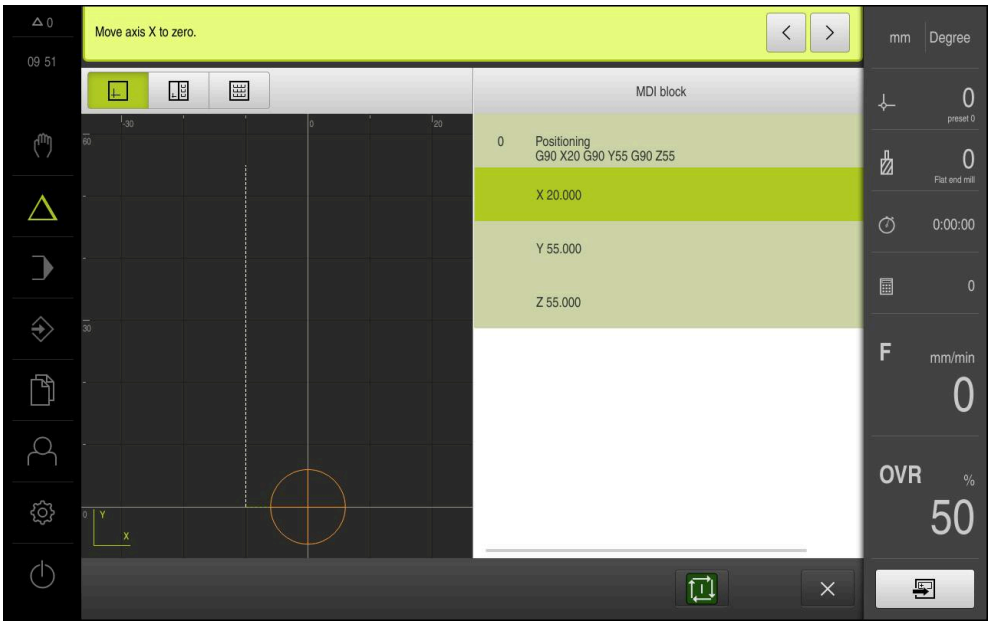

Figure 50: Example – Execution of an MDI block with scaling factor

ℹ	If the calculated dimensions cannot be attained with the selected tool, the execution of the block is aborted.

ℹ	The scaling factor cannot be changed during execution of a block.

12

Program run

12.1 Overview

This chapter describes the Program run operating mode and how to execute a previously created program in this mode.

> Make sure that you have read and understood the "Basic operation" chapter before carrying out the actions described below.
>
> **Further information:** "Basic operation", Page 57

Short description

In the Program run operating mode, you use an already created program for part production. It is not possible to change the program in this operating mode, but you can check in Single Block mode when running the program.

Further information: "In Single block mode", Page 200

The execution of the program run may vary depending on the machine tool and the product version:

- If the machine tool has NC-controlled axes, and the product uses a POSITIP 8000 NC1 software option, then the parameters for positioning movements are transferred directly to the machine tool.
  The individual steps are initiated via the NC START key on the machine tool.
- If the machine tool does not have any NC-controlled axis, then the you must perform positioning movements manually using the handwheel or the manual direction key.

During execution of a program, the wizard guides you through the individual program steps. The optional simulation window can serve as a graphical positioning aid for the axes you need to move.

Calling up

- ▶ Tap **Program run** in the main menu
- > The user interface for Program Run is displayed

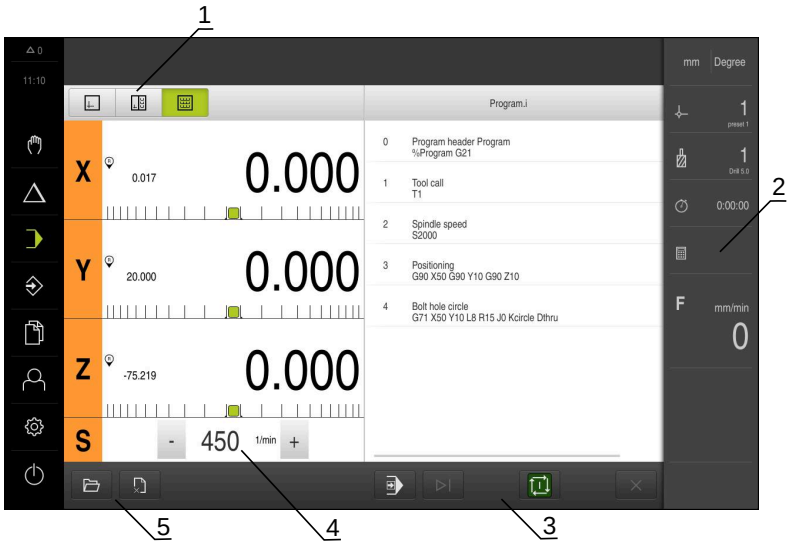

1 View bar
2 Status bar
3 Program control
4 Spindle speed (machine tool)
5 Program management

12.2 Using the program

The product displays a loaded program with the blocks and, when applicable, with the individual working steps of the blocks.

> If enabling signals are missing, the running program is halted and the drives of the machine are stopped.
>
> **Further information:** Manufacturer's documentation for the machine

Requirement:

- The appropriate workpiece and tool have been clamped
- A program *.i file type has been loaded

Further information: "Managing programs", Page 204

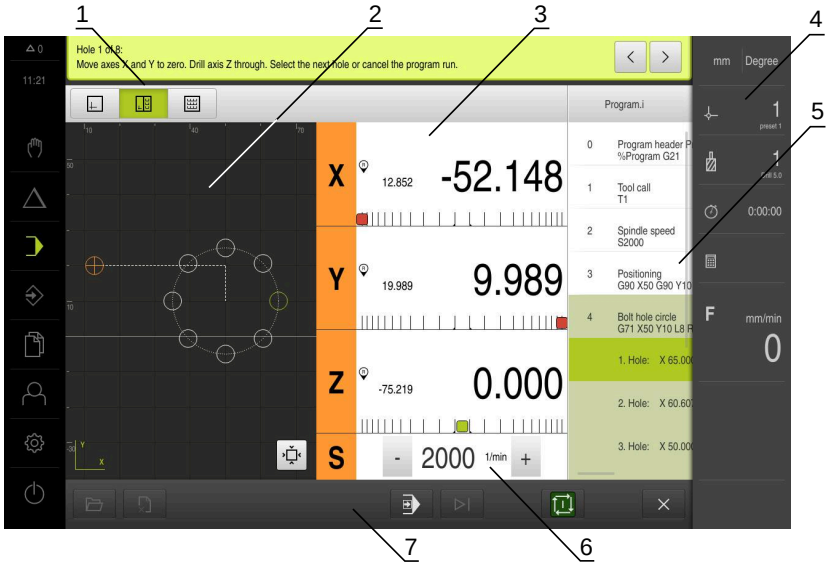

Figure 51: Example of a program in the **Program run** operating mode

1 View bar
2 Simulation window (optional)
3 Distance-to-go display
4 Toolbar
5 Program blocks
6 Spindle speed (machine tool)
7 Program management

12.2.1 Running the program

With NC-controlled axes and software option POSITIP 8000 NC1

> If the program does not contain a **Feed rate** block, the product uses the maximum machine speeds that are given in the menu.
> **Further information:** "Special settings", Page 252

- Press the NC START key on the machine tool
- > The product selects the first block of the program
- Press the NC START key on the machine tool again
- > User intervention may be required, depending on the block. The wizard shows the appropriate instruction
  With a tool call for example, the spindle is automatically stopped and you are requested to change the corresponding tool

- With multi-step blocks, such as machining patterns, tap **Next** to proceed to the next step in the wizard
- Follow the wizard's instructions for the block

> Blocks that do not require any action by the user (such as presetting) are executed automatically.

- Press the NC START key to execute the next block, and continue in this manner until the end of the program

With manual machine tools

- Tap **NC START** on the program control
- > The product selects the first block of the program
- Tap **NC START** on the program control once again
- > User intervention may be required, depending on the block. The wizard shows the appropriate instruction
  With a tool call for example, the spindle is automatically stopped and you are requested to change the corresponding tool

- With multi-step blocks, such as machining patterns, tap **Next** to proceed to the next step in the wizard
- Follow the wizard's instructions for the block

> Blocks that do not require any action by the user (such as presetting) are executed automatically.

- Tap **NC START** to execute the next block, and continue in this manner until the end of the program

In Single block mode

- Tap **Single block** on the program control to activate Single Block mode
- > When the Single Block mode is active, the program stops after each block of the program control (this also includes blocks that do not require any action by the user)

12.2.2 Proceeding to a specific program block

To go to a specific block, you can skip blocks one by one within a program until you reach the desired block. It is not possible to jump back in the program.

- Tap **Next program step** on the program control
- > The next block is selected

12.2.3 Aborting program run

If errors or problems occur, you can abort the execution of a program. The tool position and the spindle speed remain unchanged when the program run is aborted.

> The program run cannot be aborted if the current block is executing a traverse motion.

- Tap **Stop program** in the program management
- > The program run is aborted

12.2.4 Using the simulation window

You can display a visualization of the selected block in the optional simulation window.

The following options are available on the view bar:

Operating element	Function
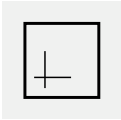	**Graphic** Display of simulation and blocks
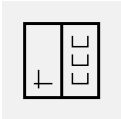	**Graphic-Position** Display of simulation, position values and blocks
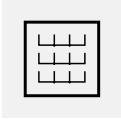	**Position** Display of position values and blocks

Depiction as contour view

The simulation window displays a contour view. The contour view aids in the precise positioning of the tool or with contour tracking in the machining plane.

The contour view uses the following colors (defaults):

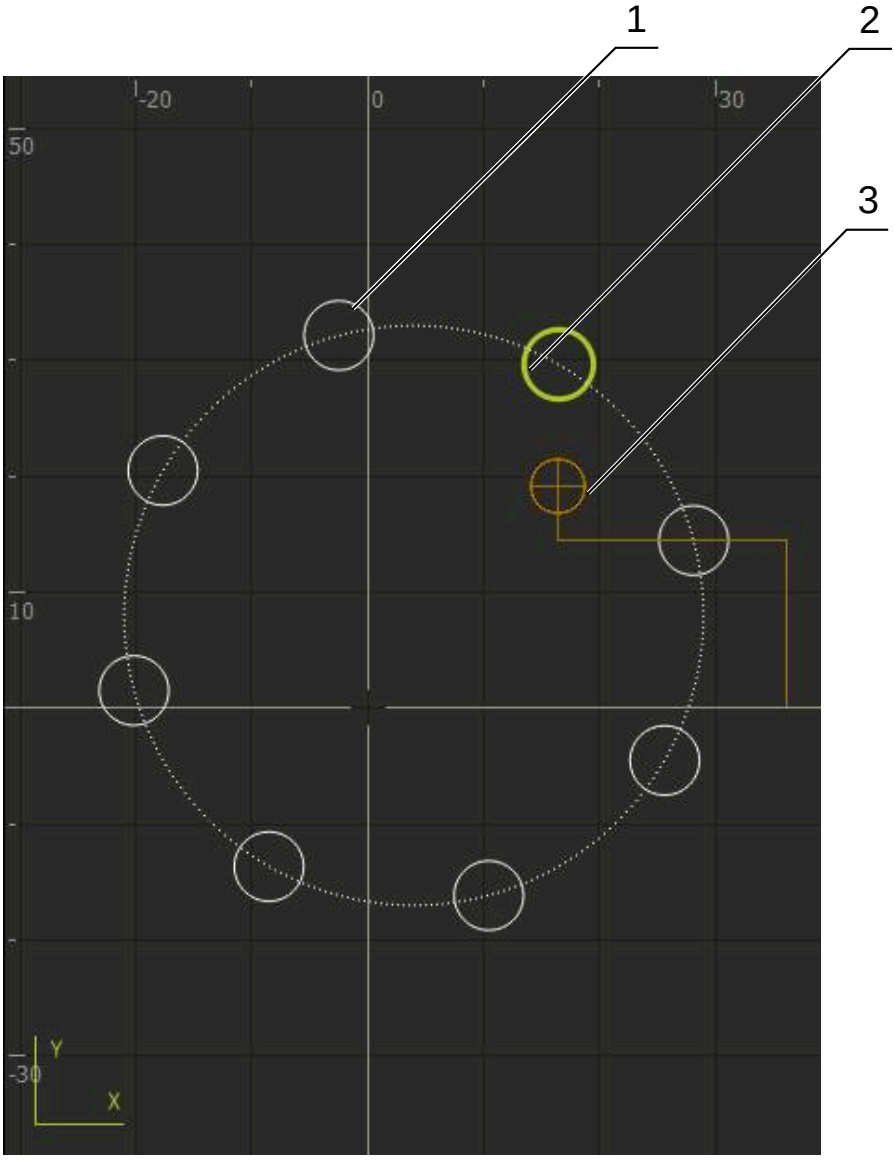

Figure 52: Simulation window with contour view

1 Machining pattern (white)
2 Current block or machining position (green)
3 Tool contour, tool position and tool path (orange)

> You can modify the colors and line thicknesses used in the contour view.
>
> **Further information:** "Simulation window", Page 233

Activating the simulation window

- Tap **Graphic-Position**
- > The simulation window for the currently selected block appears

- Tap **Graphic** on the view bar to enlarge the simulation window
- > The parameter view is hidden and the simulation window is enlarged

Modifying the contour view

- Tap **Detail view**
- > The detail view shows the tool path and the possible machining positions for the currently selected block

- Tap **Overview**
- > The overview shows the entire workpiece

12.2.5 Applying the Scaling factor

If a scaling factor is activated for one or more axes, this scaling factor is multiplied by the stored nominal position during execution of a block. This enables you to mirror and scale a block.

You can activate a scaling factor in the quick access menu.

Further information: "Adjusting settings in the quick access menu", Page 81

> If the calculated dimensions cannot be attained with the selected tool, the execution of the block is aborted.

> The scaling factor cannot be changed during execution of a block.

12.2.6 Setting the spindle speed

You can control the spindle speed depending on the configuration of the connected machine tool.

- To switch from the display of the spindle speed to the input field (if required), drag the display to the right.
- > The **Spindle speed** input field is displayed

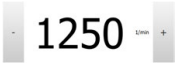

- Tap or long-press **+** or **-** to set the spindle speed to the desired value

or

- Tap the **Spindle speed** input field
- Enter the desired value
- Confirm entry with **RET**
- > The product applies the entered spindle speed as the nominal value and controls the spindle of the machine tool accordingly
- To return to the display of the spindle speed, drag the input field to the left

> If no entry is made in the **spindle speed** input field for three seconds, the device switches back to the display of the current spindle speed.

12.3 Managing programs

To run a program, open the program file, which must be of the *.i type.

> The default storage location for programs is **Internal**/**Programs**.

12.3.1 Opening a program

- Tap **Open program** in the program management
- Select the storage location in the dialog, e. g. **Internal**/**Programs** or USB mass storage device
- Tap the folder containing the file
- Tap the file
- Tap **Open**
- > The selected program is loaded

12.3.2 Closing a program

- Tap **Close program** in the program management
- > The opened program is closed

13

Programming

13.1 Overview

This chapter describes the Programming operating mode and how to create new programs and edit existing programs in this mode.

> Make sure that you have read and understood the "Basic operation" chapter before carrying out the actions described below.
>
> **Further information:** "Basic operation", Page 57

Short description

The product uses programs for recurring tasks. Programs are created through the defining of various blocks, such as positioning functions or machine functions. A sequence of multiple blocks then forms a program. You can save a maximum of 100 blocks within a program.

> Programming does not require connecting the product to a machine tool.

> To obtain a better overview during programming, you can use the POSITIP 8000 Demo software for programming. You can export the generated programs and load them onto the device.

Calling up

- ▶ Tap **Programming** in the main menu
- > The user interface for programming is displayed

Figure 53: **Programming** menu

1 View bar
2 Toolbar
3 Program management

> The status bar and the optional OEM bar are not available in the **Programming** menu.

13.2 Block types

You can use the following block types for programming:

- Positioning functions
- Change of coordinate system (preset)
- Machine functions
- Machining pattern

13.2.1 Positioning

You can manually define position values for positioning. Depending on the configuration of the connected machine tool, you can then move the tool to these positions either automatically or manually.

The following parameters are available:

Positioning block type

Parameter	Description
R0	Tool radius compensation disabled (default setting)
R+	Positive tool radius compensation; the traverse path is increased by the tool radius (outside contour)
R–	Negative tool radius compensation; the traverse path is decreased by the tool radius (inside contour)
I	Incremental position value, i.e. the position value is referenced to the actual position
	Through-hole drilling without a specified position value (only for a manually operated Z axis)

13.2.2 Coordinate systems

To change a coordinate system, you can call presets from the preset table. The coordinate system of the selected preset will then be used after the call.

Further information: "Defining presets", Page 172

Preset block

Parameter	Description
Preset number	ID from the preset table Optional: Selection from preset table

13.2.3 Machine functions

You can call machine functions to machine the workpiece.

The available functions depend on the configuration of the connected machine tool. The following blocks and parameters are available:

Block type	Parameter / Description
Spindle speed	Rotational speed of the tool spindle
Feed rate	Speed of the tool axis (only for an NC-controlled axis) If the program does not contain a **Feed rate** block, the product uses the maximum machine speeds that are given in the menu. **Further information:** "Special settings", Page 252
Tool call	Number of the tool Optional: Selection from tool table **Further information:** "Selecting a tool", Page 181 When a tool call is run, the spindle is automatically stopped and the user is requested to load the corre-sponding tool.
M function	Number of the M function Optional: Selection from function table
Dwell time	Time interval between machining steps

13.2.4 Machining pattern

You can define various machining patterns to machine complex shapes. From the data you enter, the product calculates the geometry of the machining patterns and optionally displays them in the simulation window.

The machining patterns are applicable only if the Z axis is perpendicular. If the tool axis is not perpendicular, then the values defined in the machining patterns do not apply anymore.

Before defining a machining pattern, you must

- Define a suitable tool in the tool table
- Select the tool on the status bar

Further information: "Creating a tool table", Page 143

Actual position

Applies the current axis position to the input fields of the various block types

Hole block

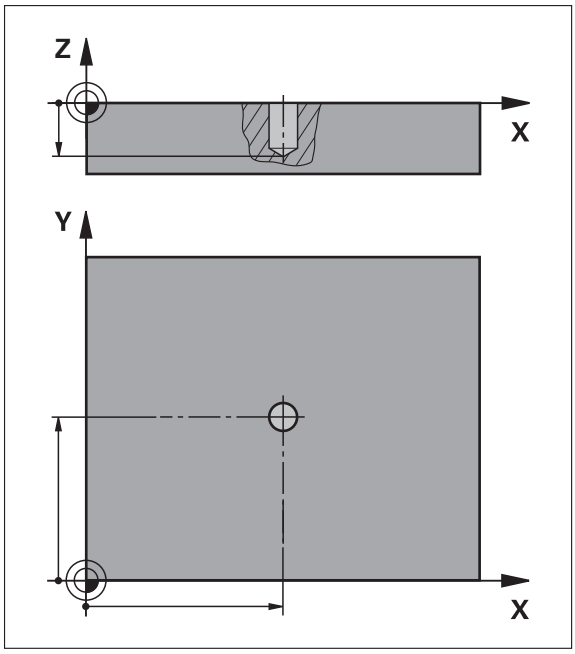

Figure 54: Schematic depiction of the **Hole** block

Parameter	Description
X	Center point of the hole in the X plane
Y	Center point of the hole in the Y plane
Depth 	Target depth for drilling in the Z plane Default: Through-hole drilling (not available for an NC-controlled Z axis)
Clearance height	Starting depth in the tool axis (only for an NC-controlled Z axis)
Feed rate	Speed of the tool axis (only for an NC-controlled Z axis)
Feed rate for plunging	Speed of the tool axis for downfeed (only for an NC-controlled Z axis)

Bolt hole circle block

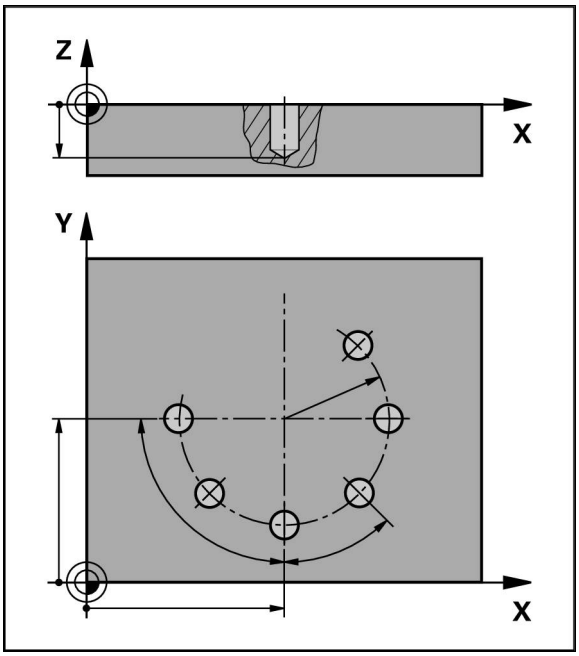

Figure 55: Schematic display of the bolt hole circle block

Parameter	Description
Number of holes	Number of holes
X coordinate of center	Center of the bolt hole arc in the X plane
Y coordinate of center	Center of the bolt hole arc in the Y plane
Radius	Radius of the bolt hole arc
Starting angle	Angle of the 1st hole of the bolt hole arc
Stepping angle 	Angle of the circle segment Default: bolt hole circle
Depth 	Target depth for drilling in the Z plane Default: Through-hole drilling (not available for an NC-controlled Z axis)
Clearance height	Starting depth for milling in the tool axis (only for NC-controlled Z axis)
Feed rate	Traversing speed of the tool axis (only for NC-controlled Z axis)
Feed rate for plunging	Traversing speed of the tool axis for plunging (only for NC-controlled Z axis)

Row of holes block

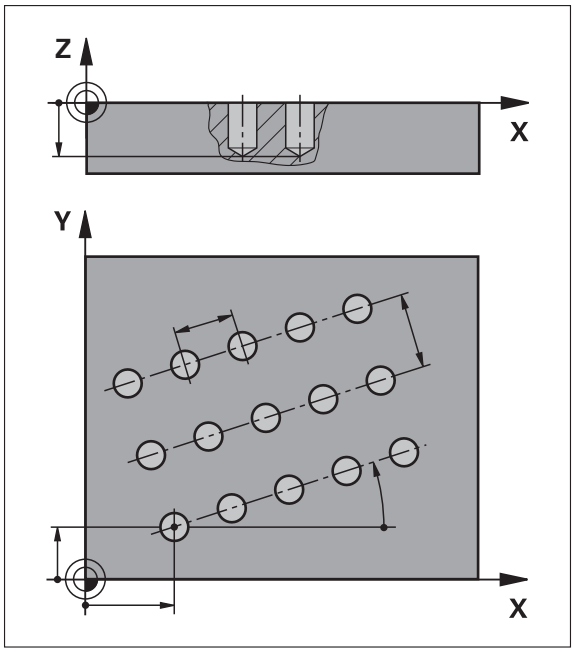

Figure 56: Schematic display of the row of holes block

Parameter	Description
X coordinate of 1st hole	1st hole of the linear hole pattern in the X plane
Y coordinate of 1st hole	1st hole of the linear hole pattern in the Y plane
Holes per row	Number of holes per row
Hole spacing	Spacing or offset between the individual holes of a row
Angle	Rotation angle of the row of holes
Depth 	Target depth for drilling in the Z plane Default: Through-hole drilling (not available for an NC-controlled Z axis)
Number of rows	Number of rows of holes in the linear hole pattern
Row spacing	Spacing between the individual rows of holes
Fill mode 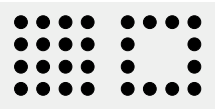	Distribution of holes ■ All holes ■ Frame of holes
Clearance height	Starting depth for milling in the tool axis (only for NC-controlled Z axis)
Feed rate	Traversing speed of the tool axis (only for NC-controlled Z axis)
Feed rate for plunging	Traversing speed of the tool axis during plunging (only for NC-controlled Z axis)

Rectangular pocket block

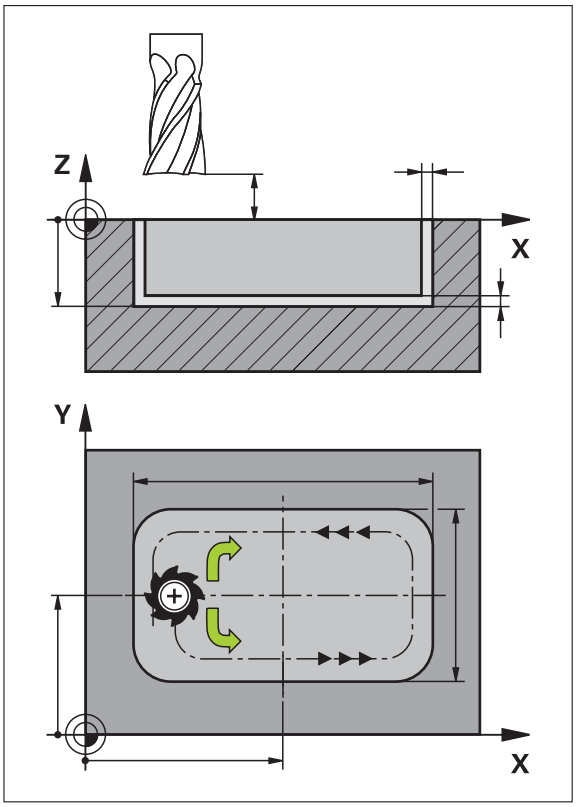

Figure 57: Schematic display of the rectangular pocket block

Parameter	Description
Type of machining 	Type of machining you want to use to create the rectangular pocket: ■ Full-surface machining (roughing and finishing) ■ Roughing ■ Finishing
Clearance height	Z plane above the workpiece in which the tool is allowed to move at maximum speed; corresponds to the starting position and the end position in the NC-controlled tool axis
Depth 	Target depth for milling in the tool axis Default: Through-hole drilling (not available for an NC-controlled Z axis)
X coordinate of center	Center of the rectangular pocket in the X plane
Y coordinate of center	Center of the rectangular pocket in the Y plane
Side length in X	Length of the rectangular pocket in the X-axis direction
Side length in Y	Length of the rectangular pocket in the Y-axis direction

Parameter	Description
Direction 	Direction in which the rectangular pocket is roughed out (clockwise or counterclockwise) Default: counterclockwise
Finishing allowance	Amount of material that is to be left remaining around the rectangular pocket and will be removed in the last pass
Path overlap 0.0001 x R ... 1.4100 x R	The path overlap factor is the value by which the tool overlaps in the directly previously milled path when clearing out a working plane Default: 0.5
Starting depth	Starting depth for milling in the tool axis (only for NC-controlled Z axis)
Plunging depth	Plunging depth in the tool axis (only for NC-controlled Z axis)
Finishing allowance for floor	The finishing allowance for floor is the amount of material that is to be left remaining on the floor of the rectangular pocket. It will be removed in the last pass. If no finishing allowance for floor is specified, the value of the finishing allowance for side is used. (only with an NC-controlled Z axis)
Feed rate for milling	Traversing speed of the tool axis during milling (only for NC-controlled Z axis)
Feed rate for plunging	Traversing speed of the tool axis during plunging (only for NC-controlled Z axis)

When machining a rectangular pocket in MDI and Program Run modes of operation, the following applies:

- Approaching the starting position is at clearance height at rapid traverse
- If a target depth was defined, positioning is at **Clearance height** at the end of the machining operation

Types of machining for a rectangular pocket

You can select between three types of machining:

- Full-surface machining
- Roughing
- Finishing

Full-surface machining (roughing and finishing)

- In each plane, roughing is performed up to the entered **Finishing allowance**
- The **Finishing allowance** is used as the basis for finishing the target contour

The rectangular pocket is machined as follows:

- Roughing and finishing of plane 1
- Roughing and finishing of planes 2 ... n + finishing of the floor

Roughing

- In each plane, roughing is performed up to the entered **Finishing allowance** and **Finishing allowance for floor**

Finishing

- The **Finishing allowance** is used as the basis for finishing the target contour
- In the final finishing run, the floor of the rectangular pocket is finished to the target depth

13.3 Creating a program

A program always consists of a program header and a sequence of blocks. You can define various block types, edit the associated block parameters, and delete individual blocks from the program.

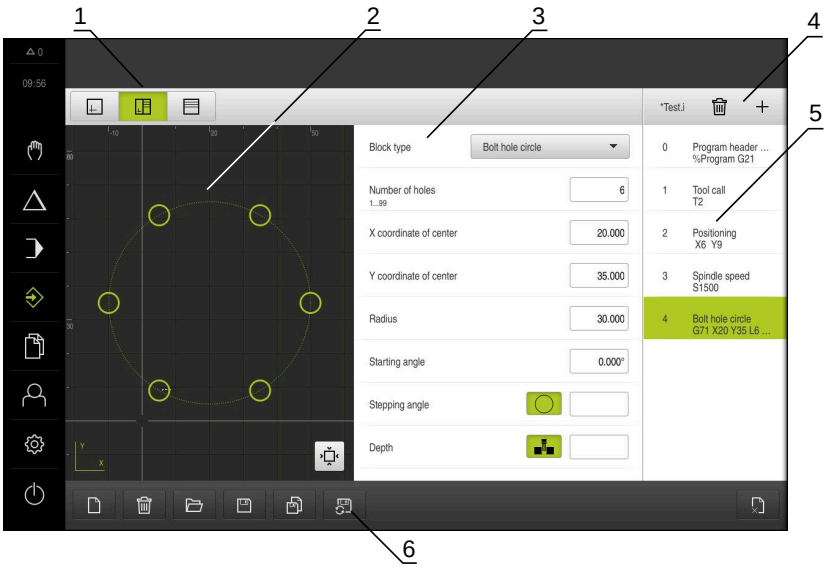

Figure 58: Example of a program in the **Programming** operating mode

1 View bar
2 Simulation window (optional)
3 Block parameters
4 Toolbar
5 Program blocks
6 Program management

13.3.1 Programming support

The product provides the following features to assist you in creating programs:

- When you add a block, the wizard displays information on the parameters that are required for the selected block type.
- If a block contains errors or undefined parameters, it is displayed in red type in the list.
- If problems occur, the wizard displays the message **The program contains incomplete program blocks.** You can switch between program blocks by tapping the arrow keys.
- The optional simulation window shows a visualization of the current block. **Further information:** "Using the simulation window", Page 193

> All changes to a program can be automatically saved.
> ▶ Tap **Save program automatically** in the program management
> > All changes will be automatically saved immediately

13.3.2 Creating a program header

- ▶ Tap **Create new program** in the program management
- ▶ In the dialog select the storage location, e.g. **Internal/Programs**, in which you want to save the program
- ▶ Enter a name for the program
- ▶ Confirm the entry with **RET**
- ▶ Tap **Create**
- > A new program containing the **Program header** start block is created
- > The name of the program is displayed on the toolbar
- ▶ Enter a unique name in the **Name** field
- ▶ Confirm the entry with **RET**
- ▶ Change the unit of measure with the slide switch, if required

13.3.3 Adding blocks

- ▶ Tap **Add block** on the toolbar
- > A new block is inserted below the current position
- ▶ Select the desired block type from the **Block type** drop-down list
- ▶ Define the relevant parameters, depending on the block type **Further information:** "Block types", Page 207
- ▶ Confirm each entry with **RET**
- > If the simulation window is active, the current block is visualized

13.3.4 Deleting blocks

- Tap **Delete** on the toolbar
- > The blocks contained in the program are marked with a Delete symbol
- Tap the Delete symbol for the blocks you want to delete in the program
- > The selected blocks are deleted from the program
- Tap **Delete** on the toolbar again

13.3.5 Saving a program

- Tap **Save program** in the program management
- > The program is saved

13.4 Using the simulation window

The simulation window visualizes the selected block. You can also use the simulation window to check a created program step by step.

The following options are available on the view bar:

Control	Function
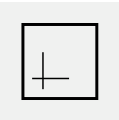	**Graphic** Display of simulation and blocks
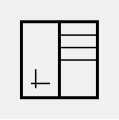	**Graphic position** Display of simulation, position values, and blocks
	**Position** Display of position values and blocks

13.4.1 Depiction as contour view

The simulation window displays a contour view. The contour view aids in the precise positioning of the tool or with contour tracking in the machining plane.

The contour view uses the following colors (defaults):

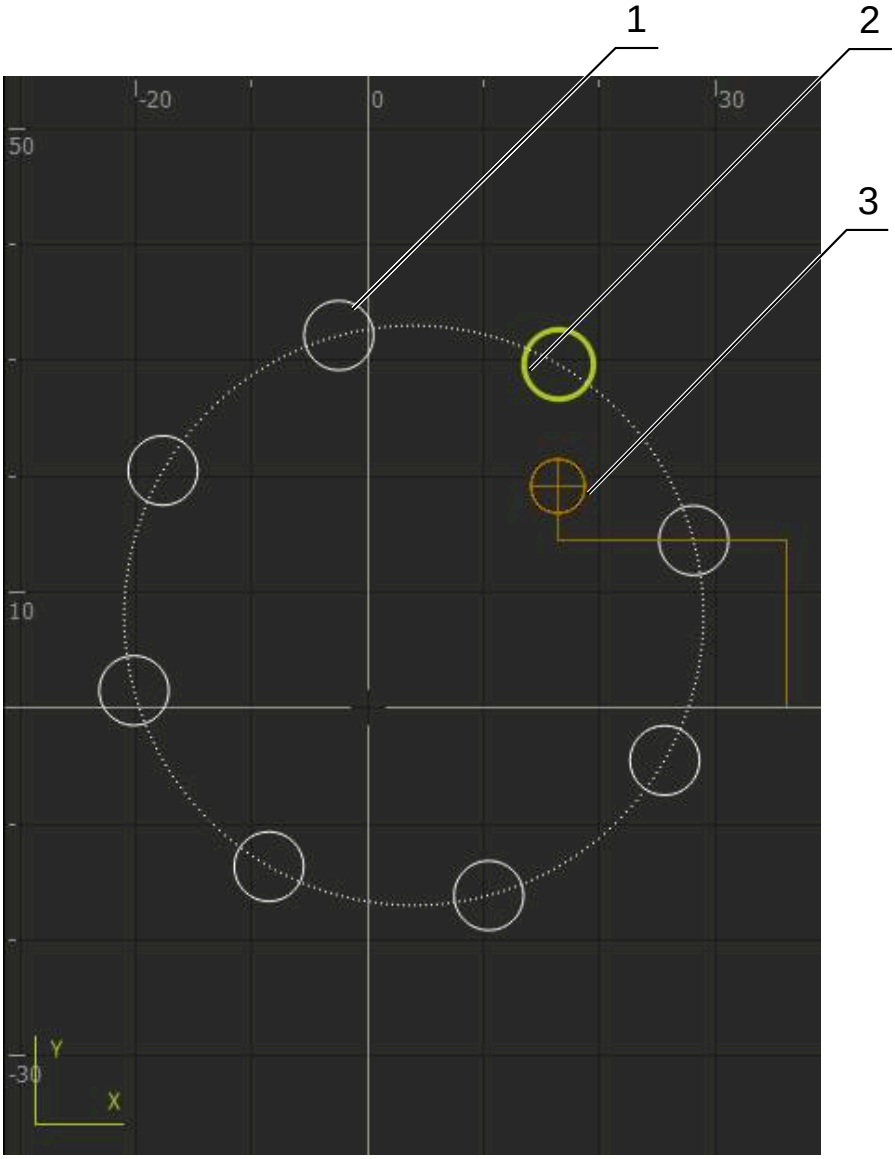

Figure 59: Simulation window with contour view

1 Machining pattern (white)
2 Current block or machining position (green)
3 Tool contour, tool position and tool path (orange)

13.4.2 Activating the simulation window

- Tap **Graphic-Form**
- > The simulation window for the highlighted block appears

- Tap **Graphic** on the view bar to enlarge the simulation window
- > The parameter view is hidden and the simulation window is enlarged

13.4.3 Checking a program in the simulation window

- Tap **Graphic**
- > The simulation window for the current program appears
- Tap each program block, one after the other
- > The program steps are displayed in the simulation window; you can enlarge the detail view as needed

- To enlarge the view, tap **Detail view**

- To return to the overview view, tap **Overview**

13.5 Managing programs

After you have created a program, you can save it for automatic program run or subsequent editing.

> The default storage location for programs is **Internal/Programs**.

13.5.1 Opening a program

- Tap **Open program** in the program management
- Select the storage location in the dialog, e. g. **Internal/Programs** or USB mass storage device
- Tap the folder containing the file
- Tap the file
- Tap **Open**
- > The selected program is loaded

13.5.2 Closing a program

- Tap **Close program** in the program management
- > The opened program is closed

13.5.3 Saving a program

- Tap **Save program** in the program management
- > The program is saved

13.5.4 Saving a program under a new name

- Tap **Save program as** in the program management
- In the dialog, select the storage location, e. g. **Internal/Programs** or USB mass storage device, in which you want to save the program
- Enter a name for the program
- Confirm the entry with **RET**
- Tap **Save as**
- > The program is saved
- > The name of the program is displayed on the toolbar

13.5.5 Saving a program automatically

- Tap **Save program automatically** in the program management
- > All changes to the program will be automatically saved immediately

13.5.6 Deleting a program

- Tap **Delete the program** in the program management
- Tap **Delete selection**
- Tap **OK** to confirm deletion
- > The program is deleted

13.6 Editing program blocks

You can make later changes to any block of a program. To apply the changes to the program, you need to save the program again after you have made the changes.

Editing program blocks

- Tap **Open program** in the program management
- Select the storage location in the dialog, e.g. **Internal/Programs**
- Tap the folder containing the file
- Tap the file
- Tap **Open**
- > The selected program is loaded
- Tap the desired block
- > The parameters of the selected block are displayed
- Edit the relevant parameters, depending on the block type
- Confirm each entry with **RET**

- Tap **Save program** in the program management
- > The edited program is saved

14

File management

14.1 Overview

This chapter describes the **File management** menu and its functions.

> Make sure that you have read and understood the "Basic operation" chapter before carrying out the actions described below.
>
> **Further information:** "Basic operation", Page 57

Short description

The **File management** menu shows an overview of the files stored in the product's memory.

Any connected USB mass storage devices (FAT32 format) or available network drives are shown in the list of storage locations. The USB mass storage devices and the network drives are displayed with their name or drive designation.

Calling up

- ▶ Tap **File management** in the main menu
- > The file management user interface is displayed

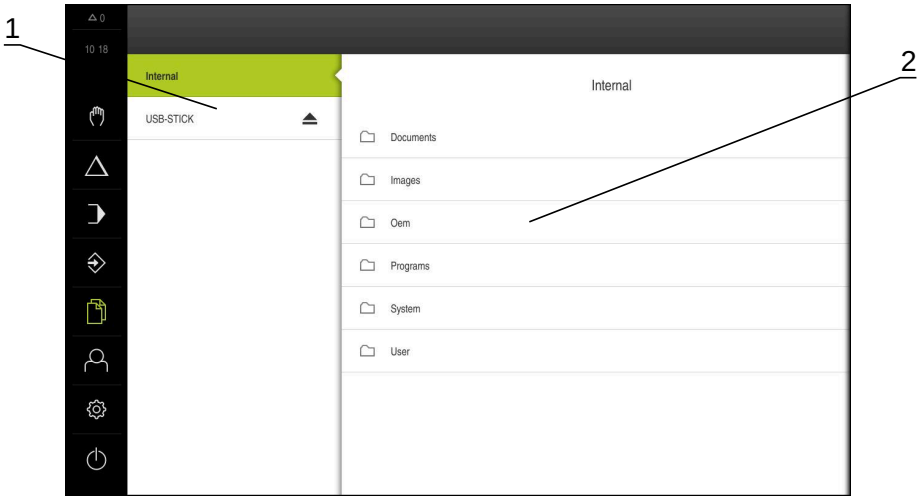

Figure 60: **File management** menu

1 List of available storage locations
2 List of folders in the selected storage location

14.2 File types

In the **File management** menu you can edit the following file types:

Type	Use	Manage	View	Open	Print
*.i	Programs	✓	–	–	–
*.mcc	Configuration files	✓	–	–	–
*.dro	Firmware files	✓	–	–	–
*.svg, *.ppm	Image files	✓	–	–	–
*.jpg, *.png, *.bmp	Image files	✓	✓	–	–
*.csv	Text files	✓	–	–	–
*.txt, *.log, *.xml	Text files	✓	✓	–	–
*.pdf	PDF files	✓	✓	–	✓

14.3 Managing folders and files

Folder structure

In the **File management** menu, the files in the **Internal** storage location are saved in the following folders:

Folders	Application
Documents	Document files
Images	Image files
Oem	Files for configuring the OEM bar (visible only to **OEM** users)
System	Audio files and system files
User	User data

Creating a new folder

- ▶ Drag the icon of the folder in which you want to create a new folder to the right
- > The operating elements are displayed
- ▶ Tap **Create a new folder**
- ▶ Tap the input field in the dialog and enter a name for the new folder
- ▶ Confirm entry with **RET**
- ▶ Tap **OK**
- > A new folder is created

Moving a folder

- Drag the icon of the folder you want to move to the right
- > The operating elements are displayed
- Tap **Move to**
- In the dialog, select the folder to which you want to move the folder
- Tap **Select**
- > The folder is moved

Copying a folder

- Drag the icon of the folder you want to copy to the right
- > The operating elements are displayed
- Tap **Copy to**
- In the dialog, select the folder to which you want to copy the folder
- Tap **Select**
- > The folder is copied

> If you copy a folder to the folder it is stored in, the suffix "_1" is appended to the name of the copied folder.

Renaming a folder

- Drag the icon of the folder you want to rename to the right
- > The operating elements are displayed
- Tap **Rename folder**
- Tap the input field in the dialog and enter a name for the new folder
- Confirm the entry with **RET**
- Tap **OK**
- > The folder is renamed

Moving a file

- Drag the icon of the file you want to move to the right
- > The operating elements are displayed
- Tap **Move to**
- In the dialog, select the folder to which you want to move the file
- Tap **Select**
- > The file is moved

> If you move a file into a folder containing a file with the same name, that file is overwritten.

Copying a file

- ▶ Drag the icon of the file you want to copy to the right
- > The operating elements are displayed
- ▶ Tap **Copy to**
- ▶ In the dialog, select the folder to which you want to copy the file
- ▶ Tap **Select**
- > The file is copied

> If you copy a file to the folder it is stored in, the suffix "_1" is appended to the name of the copied file.

Renaming a file

- ▶ Drag the icon of the file you want to rename to the right
- > The operating elements are displayed
- ▶ Tap **Rename file**
- ▶ Tap the input field in the dialog and enter a name for the new file
- ▶ Confirm the entry with **RET**
- ▶ Tap **OK**
- > The file is renamed

Deleting a folder or file

The folders and files you delete will be permanently deleted and cannot be recovered. If you delete a folder, all subfolders and files contained in that folder will also be deleted.

- ▶ Drag the icon of the folder or file you want to delete to the right
- > The operating elements are displayed
- ▶ Tap **Delete selection**
- ▶ Tap **Delete**
- > The folder or file is deleted

14.4 Viewing files

Viewing files

- Tap **File management** in the main menu
- Navigate to the storage location of the desired file
- Tap the file
- > A preview image (only with PDF and image files) as well as information about the file are displayed

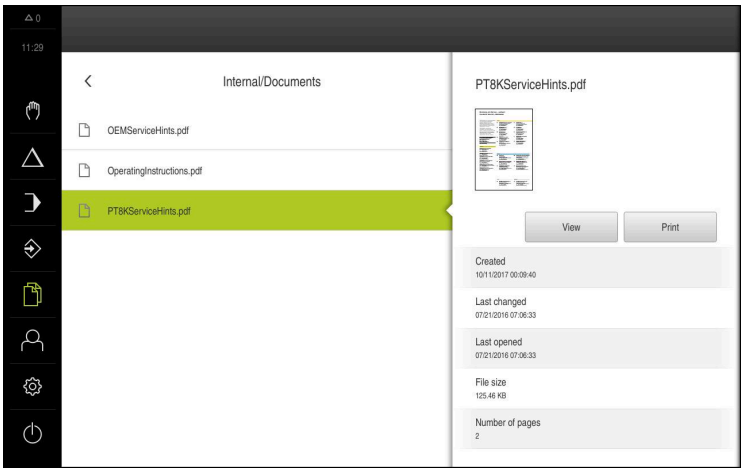

Figure 61: **File management** menu with preview image and file information

- Tap **View**
- > The file contents are displayed

- Tap **Close** to close the view

14.5 Exporting files

You can export files to an external USB mass storage device (FAT32 format) or to the network drive. You can either copy or move the files:

- If you copy files, duplicates of the files will remain stored in the product
- If you move files, the files will be deleted in the product

- Tap **File management** in the main menu
- In the **Internal** storage location, navigate to the file you want to export
- Drag the icon of the file to the right
- > The operating elements are displayed

- To copy the file, tap **Copy file**

- To move the file, tap **Move file**
- In the dialog, select the storage location to which you want to export the file
- Tap **Select**
- > The file is exported to the USB mass storage device or the network drive

Safely removing a USB mass storage device

- ▶ Tap **File management** in the main menu
- ▶ Navigate to the list of storage locations
- ▶ Tap **Safely remove**
- > The message **"The storage medium can be removed now."** appears
- ▶ Disconnect the USB mass storage device

14.6 Importing files

You can import files from a USB mass storage device (FAT32 format) or a network drive into the product. You can either copy or move the files:

- If you copy files, duplicates of the files will remain on the USB mass storage device or the network drive
- If you move files, the files will be deleted from the USB mass storage device or the network drive

- ▶ Tap **File management** in the main menu
- ▶ On the USB mass storage device or network drive, navigate to the file you want to import
- ▶ Drag the icon of the file to the right
- > The operating elements are displayed

- ▶ To copy the file, tap **Copy file**

- ▶ To move the file, tap **Move file**
- ▶ In the dialog, select the storage location to which you want to save the file
- ▶ Tap **Select**
- > The file is stored on the product

Safely removing a USB mass storage device

- ▶ Tap **File management** in the main menu
- ▶ Navigate to the list of storage locations
- ▶ Tap **Safely remove**
- > The message **"The storage medium can be removed now."** appears
- ▶ Disconnect the USB mass storage device

15

Settings

15.1 Overview

This chapter describes the setting options and the associated settings parameters for the product.

The basic setting options and settings parameters for commissioning and product setup are outlined in the respective chapters:

Further information: "Commissioning", Page 89

Further information: "Setup", Page 131

Short description

> Depending on the type of user that is logged in to the product, settings and settings parameters can be edited and changed (edit permission).
>
> If a user logged in to the product has no edit permission for a setting or a settings parameter, the setting or settings parameter is grayed out and cannot be opened or edited.

> Depending on the software options that have been activated on the product, various settings and settings parameters are available in the Settings menu.
>
> If, for example, the POSITIP 8000 NC1 software option is not activated on the unit, then the settings parameters that are necessary for this software option are not displayed on the unit.

Function	Description
General	General settings and information
Sensors	Configuration of sensors and sensor-dependent functions
Interfaces	Configuration of interfaces and network drives
User	Configuration of users
Axes	Configuration of connected encoders and error compensation
Service	Configuration of software options, service functions and information

Calling up

- Tap **Settings** in the main menu

15.2 General

This chapter describes settings for configuring the operation and display .

15.2.1 Device information

Path: **Settings ▶ General ▶ Device information**

The overview displays basic information about the software.

Parameter	Displays the information
Product designation	Product designation of the product
Part number	ID number of the unit
Serial number	Serial number of the product
Firmware version	Version number of the firmware
Firmware built on	Firmware creation date
Last firmware update on	Date of most recent firmware update
Free memory space	Free memory space in the internal storage location **Internal**
Free working memory (RAM)	Free RAM on the system
Number of unit starts	Number of times the product was started up with the current firmware
Operating time	Operating time of the product with the current firmware

15.2.2 Screen

Path: **Settings ▶ General ▶ Screen**

Parameter	Explanation
Brightness	Brightness of the screen ■ Setting range: **1 % ... 100 %** ■ Default setting: **85 %**
Energy-save-mode timeout	Time until energy-save mode is activated ■ Setting range: **0 min ... 120 min** If the value is set to 0, the power-saving mode is deactivated ■ Default setting: **30** minutes
Quit the energy saving mode	Required actions to reactivate the screen ■ **Tap and drag**: Touch the touchscreen and drag the arrow upwards from the lower edge ■ **Tap**: Touch the touchscreen ■ **Tap or axis movement**: Touch the touchscreen or move the axis ■ Default setting: **Tap and drag**

15.2.3 Display

Path: **Settings ▶ General ▶ Display**

Parameter	Explanation
Position display	Configuration of the position display in the MDI mode and Program Run operating mode. The configuration also determines the actions requested by the wizard in the MDI mode and Program Run operating mode: ■ **Position with distance to go**: The wizard prompts you to move the axis to the displayed position. ■ **Distance to go with position**: The wizard prompts you to move the axis to 0, and a positioning aid is shown. Settings: ■ **Position**: The position is displayed in large digits 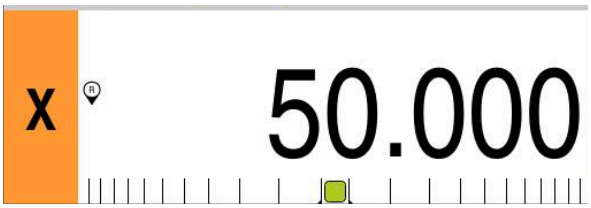 ■ **Position with distance to go**: The position is displayed in large digits, and the distance to go in small digits 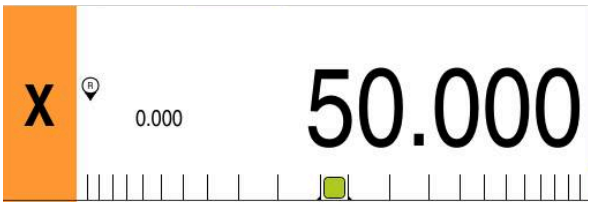 ■ **Distance to go with position**: The distance to go is displayed in large digits, and the position in small digits 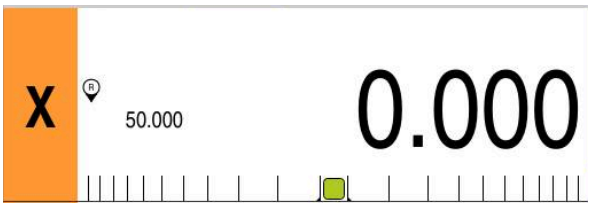 ■ Default setting: **Distance to go with position**
Position values	The position values can describe the actual values or nominal values of the axes. Settings: ■ **Actual value** ■ **Nominal value** ■ Default setting: **Actual value**
Distance-to-go indicator	Display of the distance-to-go indicator in MDI mode  ■ Settings: **ON** or **OFF** ■ Default value: **ON**

Parameter	Explanation
Digits before the decimal point for size-adjusted axis display	The number of digits in front of the decimal point indicates the size at which the position values are displayed. If the number of digits in front of the decimal point is exceeded, then the display is reduced in size so that all of the digits can be shown. ■ Setting range: **0 ... 6** ■ Default value: **3**
Simulation window	Configuration of the simulation window for MDI mode and program run. **Further information:** "Simulation window", Page 233

15.2.4 Simulation window

Path: **Settings ► General ► Display ► Simulation window**

Parameter	Explanation
Line thickness of tool position	Line thickness for displaying the tool position ■ Settings: **Standard** or **Bold** ■ Default value: **Standard**
Color of tool position	Definition of the color for displaying the tool position ■ Setting range: **Color scale** ■ Default setting: **Orange**
Line thickness of current contour element	Line thickness for displaying the current contour element ■ Settings: **Standard** or **Bold** ■ Default value: **Standard**
Color of current contour element	Definition of the color for displaying the current contour element ■ Setting range: **Color scale** ■ Default setting: **Green**
Tool path	Use of the tool path ■ Settings: **ON** or **OFF** ■ Default value: **ON**
Tool always visible	The tool is always visible in the simulation window. The contour and the current position of the tool are shown. The area is scaled during the procedure ■ Settings: **ON** or **OFF** ■ Default value: **OFF**
Horizontal alignment	Horizontal orientation of the coordinate system in the simulation window Settings: ■ **Rightward**: values increase to the right ■ **Leftward**: values increase to the left ■ Default value: **Rightward**

Parameter	Explanation
Vertical alignment	Vertical orientation of the coordinate system in the simulation window Settings: ■ **Upward**: values increase in the upward direction ■ **Downward**: values increase in the downward direction ■ Default value: **Upward**

The **Undo** buttons enable the color definitions of the simulation window to be reset to factory settings.

15.2.5 Input devices

Path: **Settings ► General ► Input devices**

Parameter	Explanation
Touchscreen sensitivity	The sensitivity of the touchscreen can be adjusted in three levels ■ **Low (contamination)**: allows operating the touchscreen if it is dirty ■ **Normal (standard)**: allows operating the touchscreen under normal conditions ■ **High (gloves)**: allows operating the touchscreen while wearing gloves ■ Default setting: **Normal (standard)**
Mouse substitute for multitouch gestures	Specifies whether mouse operation should replace operation using the touchscreen (multitouch) Settings: ■ **Auto (until first multitouch)**: Touching the touchscreen causes mouse deactivation ■ **On (no multitouch)**: Operation only possible with the mouse, the touchscreen is deactivated ■ **Off (only multitouch)**: Operation only possible with the touchscreen, the mouse is deactivated ■ Default setting: **Auto (until first multitouch)**
USB keyboard layout	If a USB keyboard is connected: ■ Language selection of the keyboard assignment

15.2.6 Sounds

Path: **Settings ▶ General ▶ Sounds**

The available sounds are grouped into categories. The sounds differ within a category.

Parameter	Explanation
Speaker	Use of the built-in speaker on the rear panel of the product ■ Settings: **ON** or **OFF** ■ Default setting: **ON**
Speaker volume	Volume of the product's speaker ■ Setting range: **0 % ... 100 %** ■ Default setting: **50 %**
Message and Error	Sound to be played when a message is displayed When you select a setting, the associated sound is played ■ Settings: **Standard**, **Guitar**, **Robot**, **Outer space**, **No sound** ■ Default setting: **Standard**
Touch probe	Sound to be played during probing When you select a setting, the associated sound is played ■ Settings: **Standard**, **Guitar**, **Robot**, **Outer space**, **No sound** ■ Default setting: **Standard**
Touch tone	Sound to be played when using a touch element When you select a setting, the associated sound is played ■ Settings: **Standard**, **Guitar**, **Robot**, **Outer space**, **No sound** ■ Default setting: **Standard**

15.2.7 Printers

Path: **Settings ▶ General ▶ Printers**

The current firmware of the units in this series does not support this function.

15.2.8 Date and time

Path: **Settings ▶ General ▶ Date and time**

Parameter	Explanation
Date and time	Current date and time of the product ■ Settings: **Year**, **Month**, **Day**, **Hour**, **Minute** ■ Default setting: **Current system time**
Date format	Format in which the date is displayed Settings: ■ **MM-DD-YYYY**: month, day, year ■ **DD-MM-YYYY**: day, month, year ■ **YYYY-MM-DD**: year, month, day ■ Default setting: **YYYY-MM-DD** (e.g. "2016-01-31")

15.2.9 Units

Path: **Settings ▶ General ▶ Units**

Parameter	Explanation
Unit for linear values	Unit of measure for linear values ■ Settings: **Millimeters** or **Inch** ■ Default setting: **Millimeters**
Rounding method for linear values	Rounding method for linear values Settings: ■ **Commercial**: Decimal digits from 1 to 4 are rounded down, decimal digits from 5 to 9 are rounded up ■ **Round off**: Decimal digits from 1 to 9 are rounded down ■ **Round up**: Decimal digits from 1 to 9 are rounded up ■ **Truncate**: Decimal digits are truncated without rounding up or down ■ **Round to 0 and 5**: Decimal digits ≤ 24 or ≥ 75 are rounded to 0, decimal digits ≥ 25 or ≤ 74 are rounded to 5 ■ Default setting: **Commercial**
Decimal places for linear values	Number of decimal places for linear values Setting range: ■ **Millimeters**: **0 ... 5** ■ **Inch**: **0 ... 7** Default value: ■ **Millimeters**: **4** ■ **Inch**: **6**

Parameter	Explanation
Unit for angular values	Unit for angular values Settings: ■ **Radian**: angles in radian (rad) ■ **Decimal degrees**: angles in degrees (°) with decimal places ■ **Deg-Min-Sec**: angles in degrees (°), minutes ['] and seconds ["] ■ Default setting: **Decimal degrees**
Rounding method for angular values	Rounding method for decimal angular values Settings: ■ **Commercial**: Decimal digits from 1 to 4 are rounded down, decimal digits from 5 to 9 are rounded up ■ **Round off**: Decimal digits from 1 to 9 are rounded down ■ **Round up**: Decimal digits from 1 to 9 are rounded up ■ **Truncate**: Decimal digits are truncated without rounding up or down ■ **Round to 0 and 5**: Decimal digits ≤ 24 or ≥ 75 are rounded to 0, decimal digits ≥ 25 or ≤ 74 are rounded to 5 ■ Default setting: **Commercial**
Decimal places for angular values	Number of decimal places for angular values Setting range: ■ **Radian**: **0 ... 7** ■ **Decimal degrees**: **0 ... 5** ■ **Deg-Min-Sec**: **0 ... 2** Default value: ■ **Radian**: **5** ■ **Decimal degrees**: **3** ■ **Deg-Min-Sec**: **0**
Decimal separator	Separator for the display of values ■ Settings: **Point** or **Comma** ■ Default setting: **Point**

15.2.10 Copyrights

Path: **Settings ► General ► Copyrights**

Parameter	Meaning and function
Open source software	Display of the licenses of the software used

15.2.11 Service info

Path: **Settings ▶ General ▶ Service info**

Parameter	Meaning and function
HEIDENHAIN - Customer service	Display of a document containing HEIDENHAIN service addresses
OEM service info	Display of a document containing service information from the machine manufacturer ■ Default: document containing HEIDENHAIN service addresses **Further information:** "Adding documentation", Page 116

15.2.12 Documentation

Path: **Settings ▶ General ▶ Documentation**

Parameter	Meaning and function
Operating Instructions	Display of the operating instructions stored on the product ■ Default: no document; the document in the desired language can be added **Further information:** "Documentation", Page 289

15.3 Sensors

This chapter describes settings for configuring the sensors.

15.3.1 Touch probe

Path: **Settings ► Sensors ► Touch probe**

Parameters	Explanation
Touch probe	Activates or deactivates the connected touch probe for use After activation, the settings for the **KT 130** edge finder are active ■ Setting range: **ON** or **OFF** ■ Default value: **OFF**
Always use touch probe for probing	Definition whether the edge finder should always be used for probing ■ Setting range: **ON** or **OFF** ■ Default value: **OFF**
Length	Length offset of the edge finder ■ Setting range: **≥ 0.0001** ■ Default value: **0.0000**
Diameter	Diameter of the edge finder ■ Setting range: **≥ 0.0001** ■ When the touch probe is activated, the default value for the **KT 130** is active: **6.0000**
Evaluation of the ready signal	Possibility of setting whether the ready signal of the touch probe should be evaluated ■ Setting range: **ON** or **OFF** ■ Default value: **ON**

15.4 Interfaces

This chapter describes settings for configuring networks, network drives, and USB mass storage devices.

15.4.1 Network

Path: **Settings ▶ Interfaces ▶ Network ▶ X116**

> Contact your network administrator for the correct network settings for configuring the product.

Parameter	Explanation
MAC address	Unique hardware address of the network adapter
DHCP	Dynamically assigned network address of the product ■ Settings: **ON** or **OFF** ■ Default value: **ON**
IPv4 address	Network address consisting of four octets The network address is automatically assigned if DHCP is active, or it can be entered manually ■ Setting range: **0.0.0.1 ... 255.255.255.255**
IPv4 subnet mask	Identifier within the network, consisting of four octets The subnet mask is automatically assigned if DHCP is active, or it can be entered manually. ■ Setting range: **0.0.0.0 ... 255.255.255.255**
IPv4 standard gateway	Network address of the router connecting a network > The network address is automatically assigned if DHCP is active, or it can be entered manually. ■ Setting range: **0.0.0.1 ... 255.255.255.255**
IPv6 SLAAC	Network address with extended namespace Only required if supported in the network ■ Settings: **ON** or **OFF** ■ Default value: **OFF**
IPv6 address	Automatically assigned if **IPv6 SLAAC** is active
IPv6 subnet prefix length	Subnet prefix in IPv6 networks
IPv6 standard gateway	Network address of the router connecting a network
Preferred DNS server	Primary server for mapping the IP address
Alternative DNS server	Optional server for mapping the IP address

15.4.2 Network drive

Path: **Settings ► Interfaces ► Network drive**

> Contact your network administrator for the correct network settings for configuring the product.

Parameter	Explanation
Name	Folder name displayed in the file management Default value: **Share** (cannot be changed)
Server IP address or host name	Name or network address of the server
Shared folder	Name of the shared folder
User name	Name of the authorized user
Password	Password of the authorized user
Show password	Display of the password in plain text ■ Settings: **ON** or **OFF** ■ Default value: **OFF**
Network drive options	Configuration of the **Authentication** for encrypting the password in the network Settings: ■ **None** ■ **Kerberos V5 authentication** ■ **Kerberos V5 authentication and packet signing** ■ **NTLM password hashing** ■ **NTLM password hashing with signing** ■ **NTLMv2 password hashing** ■ **NTLMv2 password hashing with signing** ■ Default value: **None** Configuration of the **Mount options** Settings: ■ Default value: **nounix,noserverino**

15.4.3 USB

Path: **Settings ► Interfaces ► USB**

Parameter	Explanation
Automatically detect attached USB mass storage devices	Automatic recognition of a USB mass storage device ■ Settings: **ON** or **OFF** ■ Default setting: **ON**

15.4.4 Axes (switching functions)

Path: **Settings ► Interfaces ► Switching functions ► Axes**

In the Manual operation and MDI modes of operation, all axes or individual axes can be reset to zero by setting the assigned digital input.

> Not all of the described parameters and options may be available, depending on the product version, configuration and the connected encoders.

Parameter	Explanation
General settings	Assignment of the digital input in accordance with the pin layout in order to zero all axes Default setting: **Not connected**
<Axis name>	Assignment of the digital input in accordance with pin layout in order to set all axes to zero Default setting: **Not connected**

15.4.5 Position-dependent switching functions

Path: **Settings ► Interfaces ► Position-dependent switching functions ► +**

The position-dependent switching functions enable you to set logical outputs depending on the position of an axis in a defined reference system. Switching positions and position intervals are available for this.

> Not all of the described parameters and options may be available, depending on the product version, configuration and the connected encoders.

Parameter	Explanation
Name	Name of the switching function
Switching function	Selecting whether the switching function should be activated or deactivated ■ Settings: **ON** or **OFF** ■ Default setting: **ON**

Parameter	Explanation
Reference system	Selecting the desired reference system ■ **Machine coordinate system** ■ **Preset** ■ **Target position** ■ **Tool tip**
Axis	Selecting the desired axis
Switching point	Selecting the axis position of the trigger point Default setting: **0.0000**
Type of switching	Selecting the desired type of switching ■ Edge from LOW to HIGH ■ Edge from HIGH to LOW ■ Interval from LOW to HIGH ■ Interval from HIGH to LOW ■ Default setting: Edge from LOW to HIGH
Output	Selecting the desired output ■ **X105.13 ... X105.16 (Dout 0, Dout 2, Dout 4, Dout 6)** ■ **X105.32 ... X105.35 (Dout 1, Dout 3, Dout 5, Dout 7)** ■ **X113.04 (Dout 0)**
Output is inverted	If the function is enabled, the output is set if the switching condition is not fulfilled or if the switching function is inactive ■ Default value: Not active
Pulse	Selecting whether the pulse should be activated or deactivated ■ Settings: **ON** or **OFF** ■ Default setting: **ON**
Pulse time	Selecting the desired pulse length ■ **0.1 s ... 999 s** ■ Default setting: **0.0 s**
Lower limit	Selecting the lower limit of the axis position at which switching is to occur (only with **Interval** type of switching)
Upper limit	Selecting the upper limit of the axis position at which switching is to occur (only **Interval** type of switching)
Remove the entry	Removing the position-dependent switching function

15.5 User

This chapter describes settings for configuring users and user groups.

15.5.1 OEM

Path: **Settings ► User ► OEM**

The **OEM** (Original Equipment Manufacturer) user has the highest level of permissions. This user is allowed to configure the product's hardware (e.g. connection of encoders and sensors). He can create **Setup** and **Operator**-type users, and configure the **Setup** and **Operator** users. The **OEM** user cannot be duplicated or deleted. This user cannot be logged in automatically.

Parameters	Explanation	Edit permission
Name	Name of the user ■ Default value: **OEM**	–
First name	First name of the user ■ Default value: –	–
Department	Department of the user ■ Default value: –	–
Group	Group of the user ■ Default value: **oem**	–
Password	Password of the user ■ Default value: **oem**	**OEM**
Language	Language of the user	**OEM**
Auto login	On restart of the product: Automatic login of the last logged-in user ■ Default value: **OFF**	–
Remove user account	Removal of the user account	–

15.5.2 Setup

Path: **Settings ► User ► Setup**

The **Setup** user configures the product for use at the place of operation. This user can create **Operator**-type users. The **Setup** user cannot be duplicated or deleted. This user cannot be logged in automatically.

Parameters	Explanation	Edit permission
Name	Name of the user ■ Default value: **Setup**	–
First name	First name of the user ■ Default value: –	–
Department	Department of the user ■ Default value: –	–
Group	Group of the user ■ Default value: **setup**	–

Parameters	Explanation	Edit permission
Password	Password of the user ■ Default value: **setup**	**Setup**, **OEM**
Language	Language of the user	**Setup**, **OEM**
Auto login	On restart of the product: Automatic login of the last logged-in user ■ Default value: **OFF**	–
Remove user account	Removal of the user account	–

15.5.3 Operator

Path: **Settings ▶ User ▶ Operator**

The **Operator** user is permitted to use the basic functions of the product. An **Operator**-type user cannot create additional users, but is allowed to edit various operator-specific settings, such as his name or the language. A user of the **Operator** group can be logged in automatically as soon as the product is switched on.

Parameters	Explanation	Edit permission
Name	Name of the user ■ Default value: **Operator**	**Operator**, **Setup**, **OEM**
First name	First name of the user	**Operator**, **Setup**, **OEM**
Department	Department of the user ■ Default value: –	**Operator**, **Setup**, **OEM**
Group	Group of the user ■ Default value: **operator**	–
Password	Password of the user ■ Default value: **operator**	**Operator**, **Setup**, **OEM**
Language	Language of the user	**Operator**, **Setup**, **OEM**
Auto login	On restart of the product: Automatic login of the last logged-in user ■ Settings: **ON** or **OFF** ■ Default value: **OFF**	**Operator**, **Setup**, **OEM**
Remove user account	Removal of the user account	**Setup**, **OEM**

15.5.4 Adding User

Path: **Settings ▶ User ▶ +**

Parameter	Explanation
+	Adds a new user of the type **Operator** **Further information:** "Entering and configuring users", Page 136 It is not possible to add further **OEM** and **Setup**-type users.

15.6 Axes

This chapter describes settings for configuring the axes and assigned devices.

> Not all of the described parameters and options may be available, depending on the product version, configuration and the connected encoders.

15.6.1 Fundamentals of axis configuration

> In order to use functions such as the execution of blocks, the configuration of the axes must comply with the requirements of the respective application.

Reference system on milling machines

When machining a workpiece on a milling machine, the right-hand rule helps you to remember the three axis directions: the middle finger points in the positive direction of the tool axis from the workpiece toward the tool (the Z axis), the thumb points in the positive X direction, and the index finger in the positive Y direction.

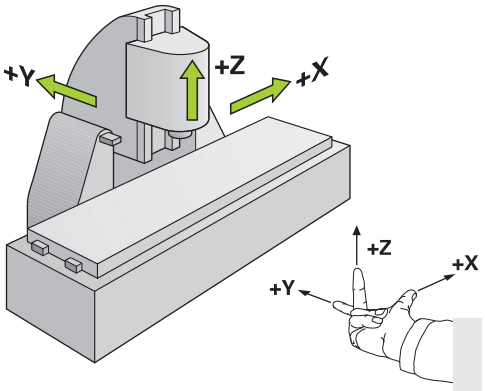

Figure 62: Assignment of the rectangular coordinate system to the machine axes

15.6.2 Reference marks

Path: **Settings ► Axes ► General settings ► Reference marks**

Parameters	Explanation
Reference mark search after unit start	Setting for the reference mark search after unit start Settings: ■ **ON**: The reference mark search must be performed after startup ■ **OFF**: No prompt for a mandatory reference mark search is displayed after startup of the product ■ Default value: **ON**
All users can cancel reference mark search	Specifies whether the reference mark search can be canceled by all user types Settings ■ **ON**: The reference mark search can be canceled by users of any type ■ **OFF**: The reference mark search can only be canceled by users of the **OEM** or **Setup** type ■ Default value: **OFF**
Reference mark search	**Start** starts the reference mark search and opens the workspace
Reference mark search status	Indicates whether the reference mark search was successful Display: ■ **Successful** ■ **Unsuccessful**
Stop of reference mark search	Indicates whether the reference mark search was canceled Display: ■ **Yes** ■ **No**

15.6.3 Information

Path: **Settings ► Axes ► General settings ► Information**

Parameters	Explanation
Assignment of the encoder inputs to the axes	Shows the assignment of the encoder inputs to the axes
Assignment of the analog outputs to the axes	Shows the assignment of the analog outputs to the axes
Assignment of the analog inputs to the axes	Shows the assignment of the analog inputs to the axes
Assignment of the digital outputs to the axes	Shows the assignment of the digital outputs to the axes
Assignment of the digital inputs to the axes	Shows the assignment of the digital inputs to the axes

With the **Reset** buttons, the assignments for the inputs and outputs can be reset.

15.6.4 Switching functions

Path: **Settings ► Axes ► General settings ► Switching functions**

The switching functions must not be used as a part of a safety function.

Parameters	Explanation
Inputs	Assignment of the digital input for the respective switching function according to the pin layout **Further information:** "Inputs (Switching functions)", Page 249
Outputs	Assignment of the digital output for the respective switching function according to the pin layout **Further information:** "Outputs (Switching functions)", Page 250

15.6.5 Inputs (Switching functions)

> The switching functions must not be used as a part of a safety function.

Path: **Settings ► Axes ► General settings ► Switching functions ► Inputs**

Parameter	Explanation
Control voltage on	Assignment of the digital input for querying the external control voltage (e.g. for the machine to be controlled) ■ Default value: **Not connected**
Emergency stop active	Assignment of the digital input for querying whether an externally connected emergency stop switch was activated ■ Default value: **Not connected**
Rapid traverse	Assignment of the digital input for a push button that activates rapid traverse. The rapid traverse is active as long as the push button is pressed and held. If rapid traverse is activated, feed rate limitation is ignored by the feed rate override and the axes traverse at maximum feed rate. ■ Default value: **Not connected**
Automatic feed	Assignment of the digital input for a push button with the following effect: ■ Manual operation: Pressing the button activates the automatic feed rate during axis movements that are controlled via the jog buttons. The axis continues to move until it reaches its next limit switch or until the push button is pressed again. The automatic feed rate only functions for axes for which limit switches have been configured ■ MDI mode and Program Run: the push button functions as an NC-START key. Pressing the push button starts and interrupts the cycles of a program block ■ Default value: **Not connected** > If no digital input is assigned to the **Automatic feed** parameter, the **NC-START** key will be displayed during the execution of an MDI block or a program.
Stop of the automatic feed	Assignment of the digital input for a push button with the following effect: ■ Manual operation: Pressing the button stops the automatic feed rate during axis movements that are controlled via the jog buttons ■ MDI mode and Program Run: The push button functions as an NC STOP key. Pressing the push button stops and interrupts the cycles of a program block ■ Default value: **Not connected**
Smooth feed selection for analog movement commands	Assignment of the digital input to select a smoother feed if the entire input voltage range is used ■ Default value: **Not connected**

Parameter	Explanation
Enable spindle-independent manual movement commands	Assignment of the digital input to execute manual NC movements that are independent of the spindle. The spindle is standing still and the axes are moved in feed mode mm/min ■ Default value: **Not connected** Spindle-independent manual movements are only possible if there is a high level at the input.

15.6.6 Outputs (Switching functions)

The switching functions must not be used as a part of a safety function.

Path: **Settings ► Axes ► General settings ► Switching functions ► Outputs**

Parameter	Explanation
Coolant	Assignment of the digital output for activating or deactivating the coolant supply of the machine tool ■ Default value: **Not connected**
Operational readiness	Assignment of the relay output set if an error (e.g. positioning error or standstill error) occurs on an axis. The error results in interruption of the axis control and power disconnection of the configured analog outputs of the axis. ■ Default value: **Not connected**
User-defined switching function	Assignment of the relay output that activates for some seconds after shutdown of the product. The relay is connected to a circuit with self-retaining function that disconnects the product and machine tool from power if this signal is applied. Example: The circuit can couple the switch-on/off of the product to the switch-on/off of the machine tool to be controlled. ■ Default value: **Not connected**
Autostart light	Assignment of the digital output for visual status display of the NC START key. The lighting is active if a cycle is executed in MDI mode or Program Run or if automatic feed rate is activated in Manual mode. The lighting flashes if an active cycle is interrupted and can be continued by pressing the NC START key. ■ Default value: **Not connected**

15.6.7 Overrides

Path: **Settings ► Axes ► General settings ► Overrides**

Parameters	Explanation
Input for feed override	Assignment of the analog input (e.g. of the feed-rate potentiometer) for the feed rate override according to pin layout Default value: **Not connected**
Umax	Definition of the maximum output voltage. The maximum voltage corresponds to 100 % of the feed-rate potentiometer ■ Setting range: **0 mV ... 5000 mV** ■ Default value: **5000**
Lower dead band	Definition of the lower dead band. The lower dead band starts at 0 % and defines the area within which no movement takes places yet. ■ Setting range: **0 % ... 100 %** ■ Default value: **0.000**

15.6.8 Adding M functions

Path: **Settings ► Axes ► General settings ► M functions ► +**

Parameters	Explanation
Name	Entry of the name for the new M function ■ Setting range: **M100 ... M120** For the configuration, see "Configuring M functions", Page 251

15.6.9 Configuring M functions

Path: **Settings ► Axes ► General settings ► M functions ► M100 ... M120**

Parameters	Explanation
Name	Entry of the name for the M function ■ Setting range: **M100 ... M120**
Digital output	Assignment of the digital output for the M function according to pin layout ■ Default value: **Not connected**
Restore switching state after device restart	Identification of M function as nonvolatile Settings: ■ **ON**: M function is saved in nonvolatile memory ■ **OFF**: M function is not saved in nonvolatile memory ■ Default value: **ON**
Digital input for switching enable	Assignment of the input for enabling the M function ■ Default value: **Not connected**
Remove	Removal of the selected M function

15.6.10 Special settings

Path: **Settings ► Axes ► General settings ► Special settings**

Parameters	Explanation
Electronic axis clamping on axis halt	Setting for electronic axis clamping when the axis is at a standstill Settings: ■ **ON**: The axis is clamped on standstill of the axis ■ **OFF**: The axis is not clamped on standstill of the axis ■ Default value: **OFF**
Only single axis movement via jog buttons	Definition of the axis movements that are possible with the traverse keys Settings: ■ **ON**: Only a single axis can be moved ■ **OFF**: Several axes can be moved simultaneously ■ Default value: **OFF**
Maximum machine speed for linear movements	Definition of the maximum speed at which NC-controlled linear axes can be moved ■ Setting range: **100 mm/min ... 10000 mm/min** ■ Default value: **2000** The **Maximum machine speed** cannot be exceeded, even if you have defined a higher feed rate for individual axes.
Maximum machine speed for radial movements	Definition of the maximum speed at which NC-controlled rotational axes can be moved. ■ Setting range: **72000 °/min ... 3600000 °/min** ■ Default value: **720000**
Rapid traverse speed for linear movements	Definition of the speed at which NC-controlled linear axes can be moved at rapid traverse ■ Setting range: **100 mm/min ... 10000 mm/min** ■ Default value: **2000**
Rapid traverse speed for radial movements	Definition of the speed at which NC-controlled rotary axes can be moved at rapid traverse. ■ Setting range: **72000 °/min ... 3600000 °/min** ■ Default value: **720000**
Velocity feedforward control for position feedback control	Setting the **Velocity feedforward control** for position feedback control of interpolated NC movements. Reducing the following error directly affects the speed control loop Settings: ■ **None** ■ **t - 2 ms** ■ **t - 4 ms** ■ **t - 6 ms** ■ Default value: **None**

Function of the velocity feedforward control

The velocity feedforward control influences the command action of the position-controlled drive. It directly affects the speed control loop as a control factor and can reduce the following error without compromising the stability of the control loop.

If you configure the **Velocity feedforward control for position feedback control** parameter, the feedforward control calculates the following error that, based on the current velocity, would result in the position controller and uses the calculated value to determine the nominal velocity value to be added to the position controller output.

15.6.11 <Axis name> (settings of the axis)

Path: **Settings ► Axes ► <Axis name>**

> In order to use functions such as the execution of blocks, the configuration of the axes must comply with the requirements of the respective application.

Further information: "Fundamentals of axis configuration", Page 246

Parameters	Explanation
Axis name	Selection of the axis name displayed in the position preview **XYZ** The axis name **S** is displayed in the selection list once you have selected **Spindle**, **Gear spindle** or **Spindle with orientation** under Axis type.

Parameters	Explanation
Axis type	Definition of the axis type Settings: ■ **Not defined** ■ **Axis** ■ **Axis + NC** (possible for up to three axes): NC-controlled linear axis or rotary axis ■ **Coupled axis**: Axis whose position value is offset against a principal axis Coupled axes do not appear in the position display. The position axis shows only the principal axis with the calculated position value of both axes. For coupled axes, the product adapts the axis name automatically. The axis name consists of the name of the principal axis and the selected calculation type, e.g. **+X**. ■ **Spindle** ■ **Spindle with orientation** ■ **Gear spindle** ■ **Electronic handwheel** ■ Default value: **Axis**
Encoder	Configuration of the connected encoder **Further information:** "Encoder", Page 256
Error compensation	Configuration of the linear error compensation **LEC** or segmented linear error compensation **SLEC** **Further information:** "Linear error compensation (LEC)", Page 263 **Further information:** "Segmented linear error compensation (SLEC)", Page 263
Outputs	Configuration of the **Outputs** for the NC function **Further information:** "Outputs", Page 264
Inputs	Configuration of the **Inputs** for the NC function **Further information:** "Inputs", Page 266
Software limit switches	Configuration of the **Software limit switches** **Further information:** "Software limit switches", Page 269
Start-up time	Configuration of the acceleration behavior and the braking behavior of the axis; time during which the drive accelerates from standstill to maximum feed rate **Fmax** or decelerates from maximum feed rate to standstill. ■ Setting range: **50 ms ... 10000 ms** ■ Default value: **500**
Kv factor P	Proportional component of the position controller during positioning ■ Setting range: **0.3 m/(min x mm) ... 6 m/(min x mm)** ■ Default value: **2.5**

Parameters	Explanation
Kv factor L	Proportional component of the position controller at a standstill ■ Setting range: **0.3 m/(min x mm) ... 6 m/(min x mm)** ■ Default value: **2.5**
Maximum positioning error	Definition of the maximum following error during positioning ■ Setting range: **5 µm ... 1000 µm** ■ Default value: **500**
Maximum standstill error	Definition of the maximum position deviation at a standstill ■ Setting range: **5 µm ... 1000 µm** ■ Default value: **100**
Positioning window	Input of the scaling factor for the positioning aid in MDI mode (only for manually operated linear axes) ■ Setting range: **0.020 mm ... 2.000 mm** ■ Default value: **0.100**
Minimum dwell time in manual positioning window	The entered required amount of time for the axes to be in the positioning window until the block is completed (only for manually operated linear axes) ■ Setting range: **0 ms to 10000 ms** ■ Default value: **0 ms**
Minimum dwell time in positioning window	The entered required amount of time for the axes to be in the positioning window until the block is completed ■ Setting range: **0 ms to 10000 ms** ■ Default value: **0 ms**
Coupled main axis	For axes of the **Coupled axis** type: Selecting the principal axis to be coupled with the axis Default value: None
Calculation with main axis	For axes of the **Coupled axis** type: Calculation type for the position values of the principal (main) axis and coupled axis Settings: ■ **+**: The position values are added (principal axis + coupled axis) ■ **-**: The position values are subtracted (principal axis – coupled axis) ■ Default value: **+**

15.6.12 Encoder

Path: **Settings ► Axes ► <Axis name> ► Encoder**

Settings for encoders with interfaces of the EnDat 2.2 type

Parameter	Explanation
Encoder input	Assignment of the encoder input to the axis of the product Settings: ■ **Not connected** ■ **X1** ■ **X2** ■ **X3** ■ **X4** ■ **X5** ■ **X6** **Further information:** "Device overview", Page 47
Interface	Automatically detected **EnDat** interface type
ID label	Information about the encoder that was read out from the electronic ID label
Diagnosis	Results of encoder diagnostics, evaluation of encoder function (e.g., based on functional reserves)
Encoder model	Connected encoder model Settings: ■ **Linear encoder**: Linear axis ■ **Angle encoder**: Rotary axis ■ **Angle encoder as linear encoder**: Rotary axis is displayed as linear axis ■ Default value: Depending on the connected encoder
Mechanical ratio	For display of a rotary axis as a linear axis: traverse path in mm per revolution ■ Setting range: **0.1 mm ... 1000 mm** ■ Default value: **1.0**
Reference point displacement	Configuration of the offset between the reference mark and the zero point **Further information:** "Reference point displacement", Page 260

Using an Angle encoder as linear encoder

Certain parameters must be taken into account when configuring angle encoder or rotary encoder as a linear encoder, in order to prevent an overrun of the system.

- The mechanical ratio must be chosen such that the maximum traverse range of 21474.483 mm is not exceeded
- The reference mark shift should only be used when considering the maximum traverse range of ±21474.483 mm, since this limit applies both with and without a reference mark shift
- **Only for multiturn rotary encoders with EnDat 2.2:** the rotary encoder must be mounted such that an overrun of the rotary encoder does not affect the machine coordinates negatively

Settings for encoders with interfaces of the type 1 V_{PP} or 11 μA_{PP}

Parameter	Explanation
Encoder input	Assignment of the encoder input to the axis of the product Settings: ■ **Not connected** ■ **X1** ■ **X2** ■ **X3** ■ **X4** ■ **X5** ■ **X6** **Further information:** "Device overview", Page 47
Incremental signal	Signal of the connected encoder Settings: ■ **1 Vpp**: Sinusoidal voltage signal ■ **11 µApp**: Sinusoidal current signal ■ Default value: **1 Vpp**
Encoder model	Connected encoder model Settings: ■ **Linear encoder**: Linear axis ■ **Angle encoder**: Rotary axis ■ **Angle encoder as linear encoder**: Rotary axis is displayed as linear axis ■ Default value: Depending on the connected encoder
Signal period	For linear encoders Length of a signal period ■ Setting range: **0.001 µm ... 1000000.000 µm** ■ Default value: **20.000**
Line count	For angle encoders and for display of a rotary axis as a linear axis. Number of lines ■ Setting range: **1 ... 1000000** ■ Default value: **1000**
Teach sequence	Starts the teach sequence for determining the **Line count** for an angle encoder based on a specified angle of rotation.
Display mode	For angle encoders and for the display of a rotary axis as a linear axis. Settings: ■ **- ∞ ... ∞** ■ **0° ... 360°** ■ **-180° ... 180°** ■ Default value: **- ∞ ... ∞**
Mechanical ratio	For display of a rotary axis as a linear axis: traverse path in mm per revolution ■ Setting range: **0.1 mm ... 1000 mm** ■ Default value: **1.0**

Parameter	Explanation
Reference marks	Configuration of the **Reference marks** **Further information:** "Reference marks (Encoder)", Page 259
Analog filter frequency	Frequency value of the analog low-pass filter Settings: ■ **33 kHz**: Suppression of interference frequencies above 33 kHz ■ **400 kHz**: Suppression of interference frequencies above 400 kHz ■ Default value: **400 kHz**
Terminating resistor	Dummy load to avoid reflections ■ Settings: **ON** or **OFF** ■ Default value: **ON**

Error monitor	Monitoring of signal errors
	Settings:
	■ **Off**: Error monitoring not active
	■ **Amplitude**: Error monitoring of the signal amplitude
	■ **Frequency**: Error monitoring of the signal frequency
	■ **Frequency & amplitude**: Error monitoring of the signal amplitude and signal frequency
	■ Default value: **Frequency & amplitude**
	
	A warning or error message is displayed if one of the limit values for error monitoring is exceeded.
	
	The limit values depend on the signal of the connected encoder:
	■ Signal **1 Vpp**, setting **Amplitude**
	  ■ Warning with voltage ≤ 0.45 V
	  ■ Error message with voltage ≤ 0.18 V or ≥ 1.34 V
	■ Signal **1 Vpp**, setting **Frequency**
	  ■ Error message with frequency ≥ 400 kHz
	■ Signal **11 µApp**, setting **Amplitude**
	  ■ Warning with current ≤ 5.76 µA
	  ■ Error message with current ≤ 2.32 µA or ≥ 17.27 µA
	■ Signal **11 µApp**, setting **Frequency**
	  ■ Error message with frequency ≥ 150 kHz

Counting direction	Signal detection during axis movement Settings: ■ **Positive**: The direction of traverse corresponds to the counting direction of the encoder ■ **Negative**: The direction of traverse does not correspond to the counting direction of the encoder ■ Default value: **Positive**
Diagnosis	Results of encoder diagnostics, evaluation of encoder function (e.g., based on Lissajous figure)

15.6.13 Reference marks (Encoder)

Path: **Settings ► Axes ► <Axis name> ► Encoder ► Reference marks**

> The reference mark search does not need to be performed for serial encoders with EnDat interface, because the axes are automatically homed.

Parameters	Explanation
Reference mark	Definition of the type of reference mark Settings: ■ **None**: There is no reference mark ■ **One**: The encoder has one reference mark ■ **Coded**: The encoder has distance-coded reference marks ■ Default value: **One**
Maximum traverse path	For linear encoders with coded reference marks: maximum traverse path for determining the absolute position ■ Setting range: **0.1 mm ... 10000.0 mm** ■ Default value: **20.0**
Nominal increment	For angle encoders with coded reference marks: maximum nominal increment for determining the absolute position ■ Setting range: **> 0° ... 360°** ■ Default value: **10.0**
Interpolation	For encoders with TTL interface: Interpolation value of the encoders and integrated interpolation for the evaluation of the coded reference marks. Settings: ■ **None** ■ **2-fold** ■ **5-fold** ■ **10-fold** ■ **20-fold** ■ **50-fold** ■ Default value: **None**
Inversion of reference mark pulses	Specifies whether the reference mark pulses are evaluated in inverted form Settings ■ **ON**: Reference pulses are evaluated in inverted form ■ **OFF**: Reference pulses are not evaluated in inverted form ■ Default value: **OFF**
Reference point displacement	Configuration of the offset between the reference mark and the zero point **Further information:** "Reference point displacement", Page 260

15.6.14 Reference point displacement

Path: **Settings ► Axes ► <Axis name> ► Encoder ► Reference marks ► Reference point displacement**

Parameters	Explanation
Reference point displacement	Activation of offset calculation between reference mark and datum of the machine ■ Setting range: **ON** or **OFF** ■ Default value: **OFF**
Reference point displacement	Manual input of the offset (in mm or degrees according to the selected encoder type) between reference mark and datum Default value: **0.00000**
Current position for reference point shift	**Apply** applies the current position as an offset (in mm or degrees, depending on the selected encoder model) between the reference mark and the zero point

15.6.15 Diagnostics for encoders with EnDat interface

Path: **Settings ► Axes ► <Axis name> ► Encoder ► Diagnosis**

Message	Description
Encoder error	Encoder errors indicate a malfunction of the encoder Examples of encoder errors that may be displayed: ■ Failure of the light unit ■ Incorrect signal amplitude ■ Incorrect position ■ Overvoltage ■ Undervoltage supply ■ Overcurrent ■ Battery failure
Encoder warning	Encoder warnings indicate that certain tolerance limits of the encoder have been reached or exceeded Examples of encoder warnings that may be displayed: ■ Frequency collision ■ Temperature exceedance ■ Light-source control reserve ■ Battery charge ■ Reference point

The messages can have the following status:

Status	Evaluation
OK!	The encoder is within the specification
Not supported	Message not supported by the encoder
Error!	Servicing/maintenance recommended; detailed analyses recommended (e.g., with PWT 101)

Path: **Settings ► Axes ► <Axis name> ► Encoder ► Diagnosis ► Functional reserves**

Parameter	Explanation
Absolute track	Displays the functional reserves of the absolute track
Incremental track	Displays the functional reserves of the incremental track
Position value calculation	Displays the functional reserves of position value calculation
Position	Displays the actual current position of the encoder

The product displays the functional reserves in a bar graph:

Color	Range	Evaluation
Yellow	0 % to 25 %	Servicing/maintenance recommended; testing recommended (e.g., with PWT 101)
Green	25 % to 100 %	The encoder is within the specification

15.6.16 Diagnostics for encoders with 1 V_{PP}/11 μA_{PP}

Path: **Settings ► Axes ► <Axis name> ► Encoder ► Diagnosis**

Parameter	Explanation
Amplitude A	Display of amplitude A in volts (V)
Amplitude B	Display of amplitude B in volts (V)
Asymmetry	Asymmetry value
Rapid traverse speed for radial movements	Phase deviation from 90°
Freeze graph	Freezing of Lissajous figure Settings: ■ **ON**: The graph is frozen and is not updated when the encoder is moved ■ **OFF**: The graph is not frozen and is updated when the encoder is moved ■ Default value: **OFF**
Show tolerance range	Display of tolerance circles in a range from 0.6 V to 1.2 V Settings: ■ **ON**: Two red circles are shown ■ **OFF**: Tolerance circles are hidden ■ Default value: **OFF**
Encoder input for comparative measurement	Display of another encoder at another encoder input for comparative measurement; the Freeze graph parameter allows you to superimpose the circles Settings: ■ Selection of desired encoder input ■ Default value: Not connected The parameter is available only if another encoder with 1 V_{PP} or 11 μA_{PP} interface is connected.
Freeze comparative graph	The Lissajous figure of the encoder at the encoder input is frozen for comparative measurement Settings: ■ **ON**: The graph is frozen and is not updated when the encoder is moved ■ **OFF**: The graph is not frozen and is updated when the encoder is moved ■ Default value: **OFF** The parameter is available only if another encoder with 1 V_{PP} or 11 μA_{PP} interface is connected.

15.6.17 Linear error compensation (LEC)

Path: **Settings ► Axes ► <Axis name> ► Error compensation ► Linear error compensation (LEC)**

Parameter	Explanation
Compensation	Mechanical influences on the axes of the machine are compensated Settings: ■ **ON**: **Compensation** is active ■ **OFF**: **Compensation** is not active ■ Default value: **OFF** i If **Compensation** is active, the **Nominal length** and **Actual length** cannot be edited or generated.
Nominal length	Input field for the length of the calibration standard according to the manufacturer's specifications Input: Millimeters or degrees (depending on the encoder)
Actual length	Input field for entering the measured length (actual distance traversed) Input: millimeters or degrees (depending on the encoder)

15.6.18 Segmented linear error compensation (SLEC)

Path: **Settings ► Axes ► <Axis name> ► Error compensation ► Segmented linear error compensation (SLEC)**

Parameters	Explanation
Compensation	Mechanical influences on the axes of the machine are compensated Settings: ■ **ON**: **Compensation** is active ■ **OFF**: **Compensation** is not active ■ Default value: **OFF** i When **Compensation** is active, then the **Table of supporting points** cannot be edited or created.
Table of supporting points	Opens the table of supporting points for manual editing
Create table of supporting points	Opens the menu for creating a new **Table of supporting points** **Further information:** "Create table of supporting points", Page 264

15.6.19 Create table of supporting points

Path: **Settings ► Axes ► <Axis name> ► Error compensation ► Segmented linear error compensation (SLEC) ► Create table of supporting points**

Parameters	Explanation
Number of supporting points	Number of supporting points on the mechanical axis of the machine ■ Setting range: **2 ... 200** ■ Default value: **2**
Spacing of the supporting points	Spacing of the supporting points on the mechanical axis of the machine ■ Default value: **100.00000**
Start point	The start point defines the position starting from which the compensation is applied to the axis ■ Default value: **0.00000**
Create	Creates a new table of supporting points based on the entries

15.6.20 Outputs

Path: **Settings ► Axes ► X, Y ... ► Outputs**

Parameters	Explanation
Type of motor	For axes that are operated with a servo motor: Selection of the motor type Settings: ■ **Bipolar servo motor**: **-10 V ... 10 V** ■ **Unipolar servo motor**: **0 V ... 10 V** ■ **Stepper motor**
Analog output	Assignment of the analog output of the servo motor according to pin layout ■ Default value: **Not connected**
Output for stepper motor	Assignment of the stepper motor output according to the pin layout ■ Default value: **Not connected**
Minimum step frequency	Definition of the minimum step frequency of the connected stepper motor ■ Setting range: **0 kHz ... 1000 kHz** ■ Default value: **0.000**
Maximum step frequency	Definition of the maximum step frequency of the connected stepper motor ■ Setting range: **0 kHz ... 1000 kHz** ■ Default value: **20.000**
Direction signal is inverted	Activate this function if you want to change the direction of rotation of the connected stepper motor ■ Default value: Not active

Parameters	Explanation
Analog output is inverted	If this function is active, the analog signal is inverted at the output ■ Default value: Not active
Open position control loop	If this function is active, the axis is operated with an open position control loop When you are setting up the product, you can move the axes in an open position control loop. This way you determine appropriate parameters for **Fmax** and **Umax**. ■ Default value: Not active
Fmax	Definition of the feed rate achieved at **Umax** ■ Setting range: **100 mm/min ... 10000 mm/min** ■ Default value: **2000** The **Maximum machine speed** cannot be exceeded, even if you have defined a higher feed rate for individual axes. **Further information:** "Special settings", Page 252
Umax	Maximum voltage that is output at the analog output in order to achieve **Fmax** ■ Setting range: **1000 mV ... 10000 mV** ■ Default value: **9000**
Enable clockwise rotation	Assignment of the digital output for the clockwise spindle enable The input must be configured if the **Unipolar servo motor** motor type is selected ■ Default value: **Not connected**
Enable counterclockwise rotation	Assignment of the digital output for the counterclockwise spindle enable The input must be configured if the **Unipolar servo motor** motor type is selected ■ Default value: **Not connected**
Drive enable	Assignment of the digital output for the drive enable according to pin layout ■ Default value: **Not connected**
Target position reached	Assignment of the digital output when the axis is on the **Target position** in MDI mode of operation or in program run ■ Default value: **Not connected**

15.6.21 Inputs

Path: **Settings ► Axes ► X, Y ... ► Inputs**

Parameters	Explanation
Movement commands from digital input	Configuration of movement commands from external input devices via the digital input
Movement commands from analog input	Configuration of movement commands from external input devices via the analog input
Movement commands from electronic handwheel	Configuration of the movement commands from an electronic handwheel
Digital enable inputs	Configuration of the digital inputs for the enable

15.6.22 Movement commands from digital input

Path: **Settings ► Axes ► X, Y ... ► Inputs ►Movement commands from digital input**

Parameter	Explanation
Enable digital movement commands	Enabling external movement commands (such as jog buttons on the operating panel of the machine) via the digital input ■ Settings: **ON** or **OFF** ■ Default value: **OFF** Digital movement commands are only available if the analog movement commands are deactivated. **Further information:** "Movement commands from analog input", Page 267 To be able to work with external movement commands you have to configure the following inputs: ■ **Input for digital movement command in positive direction** ■ **Input for digital movement command in negative direction**
Input for digital movement command in positive direction	Assignment of the digital input for the movement command in the positive direction according to pin layout Default value: **Not connected**
Input for digital movement command in negative direction	Assignment of the digital input for the movement command in the negative direction according to pin layout Default value: **Not connected**

15.6.23 Movement commands from analog input

Path: **Settings ► Axes ► X, Y ... ► Inputs ► Movement commands from analog input**

Parameter	Explanation
Enable analog movement commands	Enabling movement commands from external input devices (such as a joystick) via the analog input ■ Settings: **ON** or **OFF** ■ Default value: **OFF** Analog movement commands are only available if the digital movement commands are deactivated. **Further information:** "Movement commands from digital input", Page 266 To be able to work with external movement commands you have to configure the **Input for analog movement commands**.
Input for analog movement commands	Assignment of the analog input for the movement commands according to pin layout. The analog voltage at these inputs must be within a range of 0 V...5 V Default value: **Not connected**
Dead band	Enter the dead band value in percent. The **Dead band** defines the input voltage range around the zero position (at approx. 2.5 V), at which the supplied voltage is not yet interpreted as movement command. The value refers to the entire voltage range. ■ Setting range: **0 % ... 100 %** ■ Default value: **10 %**
Invert the analog input	If this function is active, the analog input is inverted. With an inverted input, a higher input voltage leads to a feed rate in negative direction. A lower input voltage results in a feed rate in positive direction Default value: Not active
Fmax	**Fmax** defines the maximum feed rate of the axis that can be reached via movement commands from the analog input ■ Setting range: **100 mm/min ... 2000 mm/min** ■ Default value: **2000**
Fmax for smooth feed	Definition of the feed rate for a slower feed rate with a fully deflected joystick ■ Setting range: **100 mm/min ... 2000 mm/min** ■ Default value: **200** To be able to use the function, an input must be assigned in **Smooth feed selection for analog movement commands** **Further information:** "Inputs (Switching functions)", Page 249

Parameter	Explanation
Set input voltage	Starts a teach sequence to determine the input voltage

15.6.24 Movement commands from electronic handwheel

Path: **Settings ► Axes ► X, Y ... ► Inputs ► Movement commands from electronic handwheel**

Parameter	Explanation
Enable movement commands from electronic handwheel	Enabling of movement commands from an electronic handwheel ■ Settings: **ON** or **OFF** ■ Default value: **OFF**
Selection of the electronic handwheel	In the drop-down list, select the electronic handwheel you want to use
Invert the counting direction	Activate this function if you want to invert the counting direction
Calculation of the feed override in handwheel mode	When the function is active, the current feed-rate override is taken into account in a handwheel movement
Position difference per revolution	Entry of the position difference per revolution. This parameter defines the linear movement per handwheel revolution ■ Setting range: **0.001 mm ... 8000 mm** ■ Default value: **2.5**
Maximum position difference	Entry of maximum position difference. This parameter allows you to limit the buffer that the handwheel has built up for traversing the linear axis ■ Setting range: **0.005 mm ... 20000 mm** ■ Default value: **20**
Resolution	Entry of the electronic handwheel resolution for defining how the electronic handwheel should move the axis. This parameter defines how fine or coarse the axis movement will be ■ Setting range: **1 µm ... 65000 µm** ■ Default value: **1**
Permissive button for movement commands from electronic handwheel	Assignment of the digital input for activating the electronic handwheel

15.6.25 Digital enable inputs

Path: **Settings ► Axes ► X, Y ... ► Inputs ►Digital enable inputs**

Parameter	Explanation
Input for error signal	Assignment of the digital input according to pin layout The connected servo amplifier outputs the signal. The product interprets the signal as an error signal. If an error is present at the input, the axis is is disconnected from power and abruptly brought to a standstill without a ramp. An error message is displayed on the product Default value: **Not connected** **Signal is low-active** ■ If the function is active, a "low" signal at the input is interpreted as an error. Release is given with a "high" signal
Input for activated mechanical handwheel	Assignment of the digital input for activation of the mechanical handwheel If the input is present, no NC movements can be executed with the axis. If the axis is in closed-loop control and the **Input for activated mechanical handwheel** switches, the axis is slowed down in a controlled manner and taken out of closed-loop control. When the input is no longer present, the axis can be moved in closed-loop control again Default value: **Not connected** **Signal is low-active** ■ If the function is active, a "low" signal at the input is interpreted as a mechanical handwheel

15.6.26 Software limit switches

Path: **Settings ► Axes ► X, Y ... ► Software limit switches**

Parameters	Explanation
Software limit switches	Use of the software limit switch ■ Settings: **ON** or **OFF** ■ Default value: **OFF**
Limit switch in positive direction	Distance in the positive direction from the machine datum to the software limit switch (including **Reference point displacement**, if activated) Unit: millimeters ■ Default value: **0**
Limit switch in negative direction	Distance in the negative direction from the machine datum to the software limit switch (including **Reference point displacement**, if activated) Unit: millimeters ■ Default value: **0**

Function of the software limit switches

Software limit switches limit the permissible range of traverse of an NC-controlled axis in the positive or negative direction. If the software limit switches are active, the axis is slowed down early enough to come to a standstill at the latest when reaching the software limit switch.

If a program step contains a nominal position that is outside the permissible range of traverse, the program step is acknowledged with an error message and the axis is not traversed. If the actual position of the axis is outside the permissible range of traverse, the axis can only be moved in the direction of the machine datum. A corresponding message is displayed on the product.

15.6.27 Spindle axis S

Path: **Settings ► Axes ► Spindle axis S**

Parameters	Explanation
Axis name	Definition of the axis name displayed in the position preview Settings: ■ **Not defined** ■ **S** ■ Default setting: **S**
Axis type	Definition of the axis type Settings: ■ **Not defined** ■ **Axis** ■ **Spindle** ■ **Gear spindle** ■ **Spindle with orientation** ■ Default setting: **Spindle**
Encoder	Configuration of the connected encoder **Further information:** "Encoder", Page 256
Error compensation	Configuration of the linear error compensation **LEC** or segmented linear error compensation **SLEC** **Further information:** "Linear error compensation (LEC)", Page 263 **Further information:** "Segmented linear error compensation (SLEC)", Page 263
Outputs	Configuration of the **Outputs** for the spindle **Further information:** "Outputs (S)", Page 273
Inputs	Configuration of the **Inputs** for the spindle **Further information:** "Inputs (S)", Page 274
Gear stages	Configuration of the **Gear stages** for the **Gear spindle** **Further information:** "Gear stages", Page 277

Parameters	Explanation
Gear stage selection through an external signal	Selection of the **Gear stages** of the **Gear spindle** via external signals Settings ■ **ON**: The **Gear stages** are selected via external signals ■ **OFF**: The **Gear stages** are selected manually in the operating modes ■ Default value: **OFF**
Start-up time for upper spindle speed range	Setting the **Start-up time** from standstill to the maximum spindle speed **Smax** for the upper spindle speed range ■ Setting range: **50 ms ... 10000 ms** ■ Default value: **500**
Start-up time for lower spindle speed range	Setting the **Start-up time** from standstill to the maximum spindle speed **Smax** for the lower spindle speed range ■ Setting range: **50 ms ... 10000 ms** ■ Default value: **500**
Break point of characteristic curve for start-up times	Definition of the limit between the upper and the lower spindle speed range ■ Setting range: **0 rpm ... 2000 rpm** ■ Default value: **1500**
Minimum spindle speed	Definition of the minimum spindle speed ■ Setting range: **0 rpm ... 500 rpm** ■ Default value: **50**
Maximum spindle speed for oriented spindle stop	Definition of the maximum spindle speed for oriented spindle stop ■ Setting range: **0 rpm ... 500 rpm** ■ Default value: **30** To use the function, you have to assign an input to the **Spindle position** parameter. **Further information:** "Inputs (S)", Page 274
Maximum spindle speed for thread cutting	Setting the maximum spindle speed for thread cutting during tapping in the Milling application ■ Setting range: **100 rpm ... 2000 rpm** ■ Default value: **1000**
Kv factor P	Proportional component of the position controller during positioning ■ Setting range: **0.3°/(min x m°) ... 6°/(min x m°)** ■ Default value: **2.5**
Kv factor L	Proportional component of the position controller at a standstill ■ Setting range: **0.3°/(min x m°) ... 6°/(min x m°)** ■ Default value: **2.5**
Maximum positioning error	Definition of the maximum following error during positioning ■ Setting range: **0.005° ... 10.000°** ■ Default value: **0.500**

Parameters	Explanation
Maximum standstill error	Definition of the maximum position deviation at a standstill ■ Setting range: **0.005° ... 10.000°** ■ Defaul value: **0.100**
Positioning window in NC mode	Setting the positioning window in NC mode ■ Setting range: **0.005° ... 2.000°** ■ Default value: **0.020**

Start-up times of a spindle

The **Break point of characteristic curve for start-up times** value divides the spindle speeds into two ranges. For each range you can define an individual start-up time:

- **Start-up time for upper spindle speed range**: Time within which the motor accelerates from standstill to the maximum speed **Smax**
- **Start-up time for lower spindle speed range**: Time within which the motor accelerates from standstill to the maximum speed **Smax**

15.6.28 Outputs (S)

Path: **Settings ► Axes ► S ► Outputs**

Parameters	Explanation
Type of motor	For axes that are operated with a servo motor: ■ **Bipolar servo motor**: **-10 V ... 10 V** ■ **Unipolar servo motor**: **0 V ... 10 V** ■ **Stepper motor**
Analog output	Assignment of the analog output according to pin layout ■ Default value: **Not connected**
Output for stepper motor	Assignment of the stepper motor output according to the pin layout ■ Default value: **Not connected**
Minimum step frequency	Definition of the minimum step frequency of the connected stepper motor ■ Setting range: **0 kHz ... 1000 kHz** ■ Default value: **0.000**
Maximum step frequency	Definition of the maximum step frequency of the connected stepper motor ■ Setting range: **0 kHz ... 1000 kHz** ■ Default value: **20.000**
Analog output is inverted	If this function is active, the analog signal is inverted at the output ■ Default value: Not active
Direction signal is inverted	Activate this function if you want to change the direction of rotation of the connected stepper motor ■ Default value: Not active
Open position control loop	If this function is active, the axis is operated with an open position control loop ■ Default value: Not active When you are setting up the product, you can move the axes in an open position control loop. This way you determine appropriate parameters for **Smax** and **Umax**.
Smax	Definition of the **Spindle speed** attained with **Umax** ■ Setting range: **100 rpm ... 10000 rpm** ■ Default value: **2000** **Further information:** "Special settings", Page 252
Umax	Maximum voltage that is output at the analog output in order to attain **Smax** ■ Setting range: **1000 mV ... 10000 mV** ■ Default value: **9000**

Parameters	Explanation
Enable clockwise rotation	Assignment of the digital output for the clockwise spindle enable The input must be configured if the **Unipolar servo motor** motor type is selected ■ Default value: **Not connected**
Enable counterclockwise rotation	Assignment of the digital output for the counterclockwise spindle enable The input must be configured if the **Unipolar servo motor** motor type is selected ■ Default value: **Not connected**
Drive enable	Assignment of the digital output for the drive enable according to pin layout ■ Default value: **Not connected**

15.6.29 Inputs (S)

Path: **Settings ► Axes ► S ► Inputs**

Parameters	Explanation
Movement commands from digital input	Configuration of the movement commands for the the digital input of the spindle
Digital enable inputs	Configuration of the digital inputs for the spindle enable
Spindle speed display via analog input	Configuration of the display of the actual spindle speed

15.6.30 Movement commands from digital input (S)

Path: **Settings ► Axes ► S ► Inputs ►Movement commands from digital input**

Parameter	Explanation
Enable digital movement commands	Use of the digital movement commands ■ Settings: **ON** or **OFF** ■ Default value: **OFF**
Spindle start	Assignment of the digital input for the spindle start according to pin layout ■ Default value: **Not connected**
Spindle stop	Assignment of the digital input for the spindle stop according to pin layout ■ Default value: **Not connected**

15.6.31 Digital enable inputs (S)

Path: **Settings ► Axes ► S ► Inputs ► Digital enable inputs**

Parameter	Explanation
Spindle ready	Assignment of a digital input; indicates that the spindle is in reliable condition ■ Default value: **Not connected**
Spindle interrupt	Assignment of a digital input; in active state it immediately disconnects from power the configured analog output of the spindle. A spindle movement is stopped without a ramp, axes with automatic traverse are stopped if applicable and spindle activation is prevented. The machine tool builder is responsible for the immediate stopping of the spindles. ■ Default value: **Not connected**
Spindle protection device	Assignment of a digital input; indicates whether an existing spindle protection device is open or closed. This signal influences error messages and program run. The machine tool builder is responsible for the immediate shutdown of the spindles with opened spindle protection. ■ Default value: **Not connected**
Spindle sleeve final position +	Assignment of a digital input for the upper limit switch of the sleeves. The input is used for reversing the spindle with thread cutting ■ Default value: **Not connected**
Spindle sleeve final position -	Assignment of a digital input for the lower limit switch of the sleeves. The input is used for reversing the spindle with thread cutting ■ Default value: **Not connected**
Spindle position	Assignment of a digital input; the signal positions the spindle at the speed set in **Maximum spindle speed for oriented spindle stop** during stopping to a desired position ■ Default value: **Not connected**

Parameter	Explanation
Enable spindle CCW	Assignment of a digital input for counterclockwise direction of spindle rotation according to pin layout ■ Default value: **Not connected** The external input signal takes precedence over the direction of rotation set in the **OEM bar** or in the **Programming** menu. The external signal is only evaluated if a high level is constantly present at the digital input for **Spindle start**.

15.6.32 Spindle speed display via analog input (S)

Path: **Settings ▶ Axes ▶ S ▶ Inputs ▶ Spindle speed display via analog input**

Parameter	Explanation
Spindle speed display via analog input	Activation of spindle-speed display in the position display ■ Settings: **ON** or **OFF** ■ Default value: **OFF**
Input for spindle speed display	Assignment of the analog input according to pin layout ■ Default value: **Not connected**
Spindle speed at input voltage 5 V	Entering the spindle speed at an input voltage of 5 V ■ Default value: **2000** The measured input voltage is offset against the factor **Spindle speed at input voltage 5 V**. The result is shown as actual speed in the position display.

15.6.33 Adding Gear stages

Path: **Settings ▶ Axes ▶ S ▶ Gear stages ▶ +**

Parameter	Explanation
+	Adding a new gear stage with default name **Further information:** "Gear stages", Page 277

15.6.34 Gear stages

Path: **Settings ► Axes ► S ► Gear stages**

Parameter	Explanation
Name	Entry of the name for the gear stage ■ Default value: **Stage [n]**
Smax	Definition of the **Spindle speed** attained with **Umax** ■ Setting range: **100 rpm ... 10000 rpm** ■ Default value: **2000**
Start-up time for upper spindle speed range	Definition of the required **Start-up time** until **Smax** is reached ■ Setting range: **50 ms ... 10000 ms** ■ Default value: **500**
Start-up time for lower spindle speed range	Definition of the required **Start-up time** until **Smax** is reached ■ Setting range: **50 ms ... 10000 ms** ■ Default value: **500**
Break point of characteristic curve for start-up times	Setting of the spindle speed that marks the transition from the upper to the lower spindle speed range ■ Setting range: **0 rpm ... 2000 rpm** ■ Default value: **1500**
Minimum spindle speed	Definition of the minimum spindle speed ■ Setting range: **0 rpm ... 10000 rpm** ■ Default value: **50**
Remove	Removal of the selected gear stage

15.7 Service

This chapter describes settings for product configuration, for maintaining the firmware and for enabling software options.

This chapter describes the settings for the product configuration and for the maintenance of the firmware.

15.7.1 Firmware information

Path: **Settings ▶ Service ▶ Firmware information**

The following information on the individual software modules is displayed for service and maintenance.

Parameter	Explanation
Core version	Version number of the microkernel
Microblaze bootloader version	Version number of the Microblaze bootloader
Microblaze firmware version	Version number of the Microblaze firmware
Extension PCB bootloader version	Version number of the bootloader (expansion board)
Extension PCB firmware version	Version number of the firmware (expansion board)
Boot ID	ID number of the boot process
HW Revision	Revision number of the hardware
C Library Version	Version number of the C library
Compiler Version	Version number of the compiler
Touchscreen Controller version	Version number of the touchscreen controller
Number of unit starts	Number of times the product was switched on
Qt build system	Version number of the Qt compilation software
Qt runtime libraries	Version number of the Qt runtime libraries
Kernel	Version number of the Linux kernel
Login status	Information on the logged-in user
SystemInterface	Version number of the system interface module
BackendInterface	Version number of the backend interface module
GuiInterface	Version number of the user interface module
TextDataBank	Version number of the text database module
Optical edge detection	Version number of the optical edge detection module
NetworkInterface	Version number of the network interface module
OSInterface	Version number of the operating system interface module
PrinterInterface	Version number of the printer interface module
system.xml	Version number of the system parameters
axes.xml	Version number of the axis parameters
encoders.xml	Version number of the encoder parameters
ncParam.xml	Version number of the NC parameters
spindle.xml	Version number of the spindle axis parameters

Parameter	Explanation
io.xml	Version number of the parameters for inputs and outputs
mFunctions.xml	Version number of the M function parameters
peripherals.xml	Version number of the parameters for peripherals
slec.xml	Version number of the parameters for segmented linear error compensation (SLEC)
lec.xml	Version number of the parameters for linear error compensation (LEC)
microBlazePVRegister.xml	Version number of the "Processor Version Register" of MicroBlaze
info.xml	Version number of the information parameters
audio.xml	Version number of the audio parameters
network.xml	Version number of the network parameters
os.xml	Version number of the operating system parameters
runtime.xml	Version number of the runtime parameters
users.xml	Version number of the user parameters
GI Patch Level	Patch level of the golden image (GI)

15.7.2 Back up and restore

Path: **Settings ► Service ► Back up and restore**

The unit's settings or user files can be backed up as a file so that they are available after a reset to the factory default settings has been performed or for installation on multiple units.

Parameters	Explanation
Restore settings	Restoring of the backed up settings **Further information:** "Restore settings", Page 302
Back up settings	Backing up of settings of the product **Further information:** "Back up settings", Page 129
Restore user files	Restoring of user files of the product **Further information:** "Restore user files", Page 301
Back up user files	Backing up of user files of the product **Further information:** "Back up user files", Page 130

15.7.3 Firmware update

Path: **Settings ► Service ► Firmware update**

The firmware is the operating system of the product. You can import new versions of the firmware via the product's USB port or the network connection.

> Prior to the firmware update, you must comply with the release notes for the respective software version and the information they contain regarding reverse compatibility.

> In order to be on the safe the side, the current settings must be backed up if the unit's firmware is going to be updated.

Further information: "Updating the firmware", Page 294

15.7.4 Reset

Path: **Settings ► Service ► Reset**

If necessary, you can reset the unit's settings to the factory default settings or to the condition at delivery. Software options are deactivated and subsequently need to be reactivated with the available license key.

Parameter	Explanation
Reset all settings	The settings are reset to factory default settings **Further information:** "Reset all settings", Page 303
Reset to shipping conditions	Resetting of the settings to the factory default setting and deletion of the user files from the unit's memory area **Further information:** "Reset to shipping conditions", Page 303

15.7.5 OEM area

Path: **Settings ► Service ► OEM area**

Parameters	Explanation
Documentation	Addition of OEM documentation, e.g. service information **Further information:** "Adding documentation", Page 116
Startup screen	Changing the startup screen (e.g., with one's own company logo) **Further information:** "Startup screen", Page 281
OEM bar	Customization of the OEM bar with specific functions **Further information:** "OEM bar", Page 282
Settings	Adaptation of the application mode, override display, keyboard design, and program execution. Management of texts and messages. **Further information:** "Settings (OEM area)", Page 286
Back up and restore	Backing up and restoring the settings of the OEM area
Remote access for screenshots	Permitting a network connection with the ScreenshotClient program so that ScreenshotClient can take screenshots of the unit from a computer Settings: ■ **ON**: Remote access is possible ■ **OFF**: Remote access is not possible ■ Default value: **OFF** When the unit is shut down, **Remote access for screenshots** is automatically deactivated.

15.7.6 Startup screen

Path: **Settings ► Service ► OEM area ► Startup screen**

Parameter	Explanation
Add startup screen	Selecting the image file that is to be displayed as opening screen (file type: PNG or JPG) **Further information:** "Adding a startup screen", Page 117
Delete startup screen	**Delete** clears the user-defined opening screen and restores the default view

15.7.7 OEM bar

Path: **Settings ► Service ► OEM area ► OEM bar**

Parameters	Explanation
Show bar	Display of the **OEM bar** Settings: ■ **ON**: **OEM bar** is displayed on the user interface of the respective operating modes ■ **OFF**: **OEM bar** is not displayed Default value: **OFF**
Bar items	Configuration of the **Bar items** in the **OEM bar** **Further information:** "Adding OEM-Bar items", Page 282

15.7.8 Adding OEM-Bar items

Path: **Settings ► Service ► OEM area ► OEM bar ► Bar items ► +**

Parameters	Explanation
Description	Description of the bar item on the **OEM bar**
Type	Selection of the new bar item on the **OEM bar** Settings: ■ **Empty** ■ **Logo** ■ **Spindle speed** ■ **M function** ■ **Special functions** ■ **Document** Default value: **Empty**
Parameters	The available parameters depend on the type of bar item selected: ■ **Logo**: **Further information:** "OEM bar item: Logo", Page 283 ■ **Spindle speed**: **Further information:** "Spindle speed OEM bar item", Page 283 ■ **M functions**: **Further information:** "M function OEM bar item", Page 284 ■ **Special functions**: **Further information:** "Special functions OEM bar item", Page 285 ■ **Document**: **Further information:** "Document OEM bar item", Page 285
Remove bar entry	Removing the bar item from the **OEM bar**

15.7.9 OEM bar item: Logo

Path: **Settings ► Service ► OEM area ► OEM bar ► Bar items ► Logo**

Parameters	Explanation
Description	Description of the bar item on the **OEM bar**
Type	**Logo**
Select logo	Selecting the desired image for the depiction
Link to documentation	Using a logo for calling linked documentation Settings: ■ **None** ■ **Operating Instructions** ■ **OEM service info** Default value: **None**
Upload image file	Copies a selected image file to the storage location **/Oem/Images** ■ File format: PNG, JPG, PPM, BMP, or SVG ■ Image size: max. 140 x 70 px
Remove bar entry	Removing the bar item from the **OEM bar**

15.7.10 Spindle speed OEM bar item

Path: **Settings ► Service ► OEM area ► OEM bar ► Bar items ► Spindle speed**

Parameters	Explanation
Description	Description of the bar item on the **OEM bar**
Type	**Spindle speed**
Spindle	**S**
Spindle speed	Setting the spindle speed ■ Setting range: depends on the configuration of the spindle axis S ■ Default value: **0**
Remove bar entry	Removing the bar item from the **OEM bar**

15.7.11 M function OEM bar item

Path: **Settings ► Service ► OEM area ► OEM bar ► Bar items ► M function**

Parameters	Explanation
Description	Description of the bar item on the **OEM bar**
Type	**M function**
Number of the M function	Selection of the desired M function Setting ranges ■ **100.T ... 120.T** (**TOGGLE**: switches between the states when tapped) ■ **100.P ... 120.P** (**PULSE**: The length can be set in **Pulse time**) ■ Default value: Empty
Pulse time	Selecting the length of the high-active pulse Setting range ■ 8 ms ... 1500 ms ■ Default value: 500 ms
Restart	Restarting the pulse duration ■ Settings: **ON** or **OFF** ■ Default value: **OFF**
Select image for active function	Selecting the desired image for depicting the active function
Select image for inactive function	Selecting the desired image for depicting the inactive function
Upload image file	Copies a selected image file to the storage location **/Oem/Images** ■ File format: PNG, JPG, PPM, BMP, or SVG ■ Image size: Max. 100 x 70 px
Remove bar entry	Removing the bar item from the **OEM bar**

15.7.12 Special functions OEM bar item

Path: **Settings ► Service ► OEM area ► OEM bar ► Bar items ► Special functions**

Parameters	Explanation
Description	Description of the bar item on the **OEM bar**
Type	**Special functions**
Function	Selection of the desired special function Settings: ■ **Thread cutting** ■ **Spindle direction** ■ **Coolant** ■ **Coolant during spindle operation** ■ **Clamp axes** ■ **Zero the tool axis** Default value: **Thread cutting**
Spindle	Only with **Spindle direction** function: **S**
Select image for clockwise spindle direction	Only with **Spindle direction** function: Selecting the desired image for clockwise spindle rotation
Select image for counterclockwise spindle direction	Only with **Spindle direction** function: Selecting the desired image for counterclockwise spindle rotation
Select image for active function	Selecting the desired image for depicting the active function
Select image for inactive function	Selecting the desired image for depicting the inactive function
Upload image file	Copies a selected image file to the storage location **/Oem/Images** ■ File format: PNG, JPG, PPM, BMP, or SVG ■ Image size: Max. 100 x 70 px
Remove bar entry	Removing the bar item from the **OEM bar**

15.7.13 Document OEM bar item

Path: **Settings ► Service ► OEM area ► OEM bar ► Bar items ► Document**

Parameters	Explanation
Description	Description of the bar item on the **OEM bar**
Type	**Document**
Select a document	Selecting the desired document
Select image for display	Selecting the desired image for depicting the function
Upload image file	Copies a selected image file to the storage location **/Oem/Images**
Remove bar entry	Removing the bar item from the **OEM bar**

15.7.14 Settings (OEM area)

Path: **Settings ► Service ► OEM area ► Settings**

Parameters	Explanation
Application	The type of application mode; a change becomes active after a restart Settings: ■ **Milling** ■ **Turning** Default value: **Milling**
Override display	Type of override display in **Manual mode** and **MDI** Settings: ■ **Percent**: The override is displayed as a percentage of the set maximum feed rate ■ **Value**: Override is displayed in mm/min Default value: **Percent**
Keyboard theme	Selection of the keyboard layout Settings: ■ **Standard**: Confirm the input with (Return) ■ **TNC**: entry confirmed with (Enter) Default value: **Standard**
Program run	Modifying of the program execution **Further information:** "Program execution", Page 286
Text database	Text database with message texts that are used for OEM-specific messages **Further information:** "Text database", Page 287
Messages	Definition of OEM-specific messages **Further information:** "Messages", Page 288

15.7.15 Program execution

Path: **Settings ► Service ► OEM area ► Settings ► Program run**

Parameter	Explanation
Automatic advance on reaching upper spindle sleeve final position	Automatic advance when executing hole patterns always occurs when the upper spindle sleeve limit switch is reached ■ Settings: **ON** or **OFF** ■ Default value: **OFF**
M functions	For the configuration, see "Configuring M functions", Page 287

15.7.16 Configuring M functions

Path: **Settings ► Service ► OEM area ► Settings ► Program run ► M functions**

Parameter	Explanation
Number of the M function	Enter the number of the new M function ■ Setting range: **M2.0 ... M120.0** (**0**: The output assigned to the M function is switched to inactive) ■ Setting range: **M2.1 ... M120.1** (**1**: The output assigned to the M function is switched to active) ■ Setting range: **M2.2 ... M120.2** (**2**: The output assigned to the M function generates a high active pulse of 8 ms)
Select image for dialog during program run	Select the desired image for display during program run
Upload image file	Copies a selected image file to the storage location **/Oem/Images** ■ File format: PNG, JPG, PPM, BMP, or SVG ■ Image size: Max. 100 x 70 px
Remove the entry	Remove the entry

15.7.17 Text database

Path: **Settings ► Service ► OEM area ► Settings ► Text database**

The device features the option of importing your own text database. The **Messages** parameter allows you to show various messages.

Parameter	Explanation
Select text database	Selecting an XML type text database stored in the device **Further information:** "Creating a Text database", Page 124
Deselect text database	Deselecting the currently selected text database

15.7.18 Messages

Path: **Settings ► Service ► OEM area ► Settings ► Messages**

Parameter	Explanation
Name	Description of the message
Text ID or text	Selecting the message to be displayed. You can enter a text ID and use it to select an existing message text from your text database. As an alternative, you can directly enter a new message text If you change the language of your product's user interface, the translated message texts from the text database are used. Message texts you have directly entered are shown untranslated. **Further information:** "Text database", Page 287
Message type	Selecting the desired type of message Settings: ■ **Standard**: The message is displayed as long as the input is active ■ **Acknowledgment by user**: The message is displayed until the user acknowledges it ■ Default value: **Standard**
Input	Assignment of the digital input in accordance with pin layout in order to show the message ■ Default value: **Not connected**
Remove the entry	Removing the message entry

15.7.19 Back up and restore (OEM area)

Path: **Settings ► Service ► OEM area ► Back up and restore**

Parameter	Explanation
Back-up OEM-specific folders and files	Backing up the settings of the OEM area as a ZIP file **Further information:** "Back-up OEM-specific folders and files", Page 127
Restore OEM specific folders and files	Restoring the settings of the OEM area as a ZIP file **Further information:** " Restore OEM specific folders and files", Page 127

15.7.20 Documentation

Path: **Settings ► Service ► Documentation**

The product provides the possibility to upload the corresponding Operating Instructions in the desired language. The Operating Instructions can be copied from the supplied USB mass storage device to the product.

The latest version can be downloaded from the download area at **www.heidenhain.com**.

Parameters	Explanation
Add Operating Instructions	Adding the Operating Instructions in the desired language

15.7.21 Software options

Path: **Settings ► Service ► Software options**

> Software options need to be enabled on the product via a license key. Before you can use the associated hardware components, you need to enable the respective software option.
>
> **Further information:** "Activating the Software options", Page 94

Parameter	Explanation
Overview	Overview of all software options that are active on the product
Request options	Creation of a license key request that can be submitted to a HEIDENHAIN service agency **Further information:** "Requesting license key", Page 94
Request trial options	Creation of a license key request that can be submitted to a HEIDENHAIN service agency **Further information:** "Requesting license key", Page 94
Activate options	Activation of the software options via license key or license file **Further information:** "Activating a license key", Page 95
Reset trial options	Reset of the trial options by entering a license key

16

Servicing and maintenance

16.1 Overview

This chapter describes the general maintenance work on the product.

> The following steps must be performed only by qualified personnel.
> **Further information:** "Personnel qualification", Page 29

> This chapter contains a description of maintenance work for the product only. Any maintenance work on peripheral devices is not described in this chapter.
> **Further information:** Manufacturer's documentation for the respective peripheral devices

16.2 Cleaning

NOTICE

Cleaning with sharp-edged objects or aggressive cleaning agents

Improper cleaning will cause damage to the product.

- Never use abrasive or aggressive cleaners, and never use strong detergents or solvents
- Do not use sharp-edged objects to remove persistent contamination

Cleaning the housing

- Use only a cloth dampened with water and a mild detergent for cleaning the exterior surfaces

Cleaning the screen

Activate cleaning mode to clean the display. This switches the unit to an inactive state without interrupting the power supply. The screen is switched off in this state.

- Tap **Switch-off** in the main menu to activate the cleaning mode

- Tap **Cleaning mode**
- The screen switches off
- Use a lint-free cloth and a commercially available glass cleaner to clean the screen

- To deactivate the cleaning mode, tap anywhere on the touchscreen
- An arrow appears at the bottom of the screen
- Drag the arrow up
- The screen is switched on and shows the user interface last displayed

16.3 Maintenance plan

The product is largely maintenance-free.

NOTICE

Operating defective devices

Operating defective devices may result in serious consequential damage.

- Do not repair or operate the device if it is damaged
- Replace defective devices immediately or contact a HEIDENHAIN service agency

The following steps are only to be performed by electrical specialists.
Further information: "Personnel qualification", Page 29

Maintenance step	Interval	Corrective action
▶ All labels and symbols provided on the product must be checked for readability	Annually	▶ Contact HEIDENHAIN service agency
▶ Inspect electrical connections for damage and check their function	Annually	▶ Replace defective cables. Contact HEIDENHAIN service agency if required
▶ Check power cables for faulty insulation and weak points	Annually	▶ Replace power cables according to the specification

16.4 Resuming operation

When operation is resumed, e.g. when the product is reinstalled after repair or when it is remounted, the same measures and personnel requirements apply as for mounting and installing the product.

Further information: "Mounting", Page 39

Further information: "Installation", Page 45

When connecting the peripheral devices (e.g. encoders), the operating company must ensure safe resumption of operation and assign authorized and appropriately qualified personnel to the task.

Further information: "Obligations of the operating company", Page 29

16.5 Updating the firmware

The firmware is the operating system of the product. You can import new versions of the firmware via the product's USB port or the network connection.

	Prior to the firmware update, you must comply with the release notes for the respective software version and the information they contain regarding reverse compatibility.

	In order to be on the safe the side, the current settings must be backed up if the unit’s firmware is going to be updated.

Prerequisite

- The new firmware is available as a *.dro file
- To update the firmware over the USB port, the current firmware must be stored on a USB mass storage device (FAT32 format)
- To update the firmware via the network interface, the current firmware must be available in a folder on the network drive

Starting a firmware update

- Tap **Settings** in the main menu
- Tap **Service**
- Open in succession:
  - **Firmware update**
  - **Continue**
- > The service application is launched

Updating the firmware

The firmware can be updated from a USB mass storage device (FAT32 format) or via a network drive.

- Tap **Firmware update**

- Tap **Select**
- If required, connect a USB mass storage device to a USB port of the product
- Navigate to the folder containing the new firmware

> If you have accidentally tapped the wrong folder, you can return to the previous folder.
>
> - Tap the file name that is displayed above the list

- Select the firmware
- Tap **Select** to confirm the selection
- > The firmware version information is displayed
- Tap **OK** to close the dialog

> The firmware update cannot be canceled once the data transfer has started.

- Tap **Start** to start the update
- > The screen shows the progress of the update
- Tap **OK** to confirm successful update
- Tap **Finish** to terminate the service application
- > The service application is terminated
- > The main application is launched
- > If automatic user login is active, the user interface is displayed in the **Manual operation** menu
- > If automatic user login is not active, the **User login** menu is displayed

Safely removing a USB mass storage device

- Tap **File management** in the main menu
- Navigate to the list of storage locations

- Tap **Safely remove**
- > The message **"The storage medium can be removed now."** appears
- Disconnect the USB mass storage device

16.6 Encoder diagnostics

The diagnostic function allows you to perform a basic functional check of the encoders. For absolute encoders with EnDat interface, the messages from the encoder and its functional reserves are displayed. For incremental encoders with 1 V_{PP} or 11 μA_{PP} interface, the displayed values allow you to evaluate the fundamental functioning of the encoders. Based on this initial diagnostic option for encoders, you can initiate further actions for more detailed testing or repair.

> The PWT 101 or PWM 21 from HEIDENHAIN provides further inspection and testing capabilities.
> For more information, please refer to **www.heidenhain.com**.

16.6.1 Diagnostics for encoders with 1 V_{PP}/11 μA_{PP} interface

For encoders with 1 V_{PP}/11 μA_{PP} interface, you can evaluate the functioning of the encoder based on the signal amplitudes, asymmetry, and phase deviation. These values are also displayed graphically as a Lissajous figure.

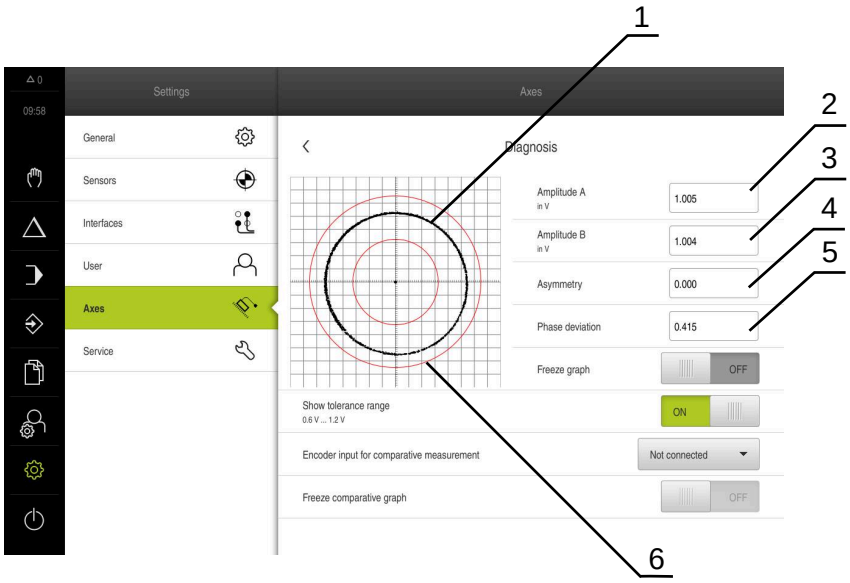

1 Lissajous figure
2 Amplitude A
3 Amplitude B
4 Asymmetry
5 Phase error
6 Amplitude tolerances

For encoders with 1 V_{PP}/11 μA_{PP} interface, the following values are displayed:

- **Amplitude A**
- **Amplitude B**
- **Asymmetry**
- **Rapid traverse speed for radial movements**

The following parameters are available for evaluation:

Parameter	Explanation
Freeze graph	Freezing of Lissajous figure Settings: ■ **ON**: The graph is frozen and is not updated when the encoder is moved ■ **OFF**: The graph is not frozen and is updated when the encoder is moved ■ Default value: **OFF**
Show tolerance range	Display of tolerance range for the amplitudes ■ 1 V_{PP}: 0.6 V ... 1.2 V ■ 11 μA_{PP}: 7 μA_{PP} ... 16 μA_{PP} Settings: ■ **ON**: The tolerance range is displayed ■ **OFF**: The tolerance range is hidden ■ Default value: **OFF**
Encoder input for comparative measurement	Display the encoder of another encoder input for comparison; the signals can be superimposed for comparison Settings: ■ Selection of desired encoder input ■ Default value: Not connected The parameter is available only if another encoder with 1 V_{PP} or 11 μA_{PP} interface is connected.
Freeze comparative graph	The Lissajous figure of the encoder at the encoder input is frozen for comparative measurement Settings: ■ **ON**: The graph is frozen and is not updated when the encoder is moved ■ **OFF**: The graph is not frozen and is updated when the encoder is moved ■ Default value: **OFF** The parameter is available only if another encoder with 1 V_{PP} or 11 μA_{PP} interface is connected.

▶ Tap **Settings** in the main menu

▶ Tap **Axes**
▶ Open in succession:
  ■ <Axis name>
  ■ **Encoder**
  ■ **Diagnosis**
▶ To display the signals and values, move the encoder

16.6.2 Diagnostics for encoders with EnDat interface

You can check the encoders with EnDat interface for proper functioning by reading out the errors or warnings and by evaluating their functional reserves.

Depending on the encoder, not all of the functional reserves and messages are supported.

Functional reserves

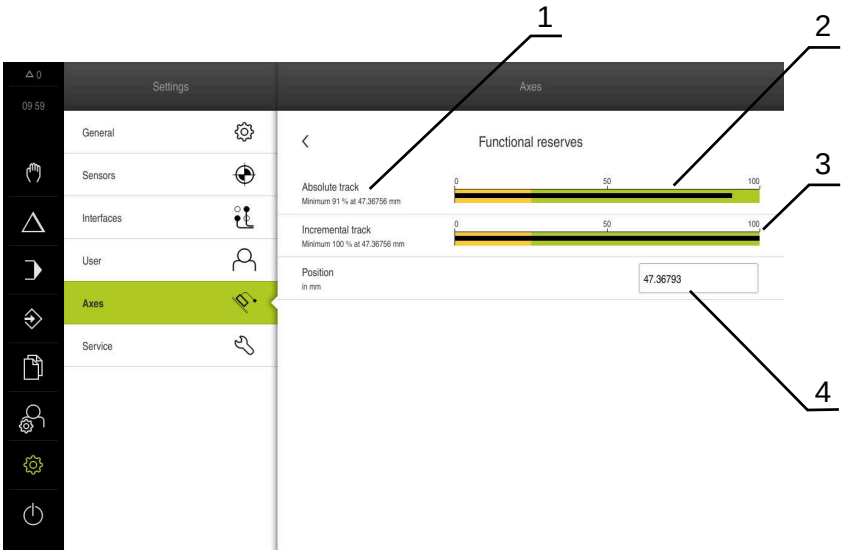

Figure 63: Example of functional reserves of a length gauge

1 Minimum percentage value of functional reserves at this specific position
2 Absolute track
3 Incremental track
4 Current position of encoder

The following functional reserves are displayed for absolute encoders with EnDat interface:

- **Absolute track**
- **Incremental track**
- **Position value calculation**

The product displays the functional reserves in a bar graph:

Color	Range	Evaluation
Yellow	0 % ... 25 %	Servicing/maintenance recommended
Green	25 % ... 100 %	The encoder is within the specification

▶ Tap **Settings** in the main menu

- Tap **Axes**
- Open in succession:
  - <Axis name>
  - **Encoder**
  - **Diagnosis**
  - **Functional reserves**
- To display the **Functional reserves**, move the encoder

Errors and warnings

The messages displayed by the product for the serial interface are classified as follows:

Message	Description
Encoder error	Encoder errors indicate a malfunction of the encoder Examples of encoder errors that may be displayed: ■ Failure of the light unit ■ Incorrect signal amplitude ■ Incorrect position ■ Overvoltage ■ Undervoltage supply ■ Overcurrent ■ Battery failure
Encoder warning	Encoder warnings indicate that certain tolerance limits of the encoder have been reached or exceeded Examples of encoder warnings that may be displayed: ■ Frequency collision ■ Temperature exceedance ■ Light-source control reserve ■ Battery charge ■ Reference point

The messages can have the following status:

Status	Evaluation
OK!	The encoder is within the specification
Not supported	Message not supported by the encoder
Error!	Servicing/maintenance recommended; detailed analyses recommended (e.g., with PWT 101)

- Tap **Settings** in the main menu

- Tap **Axes**
- Open in succession:
  - <Axis name>
  - **Encoder**
  - **Diagnosis**
- > Errors and warnings are displayed

16.7 Restoring files and settings

You can restore saved files and settings to a device. The following sequence should be followed when restoring files and settings:

- Restore OEM-specific folders and files
- Restore user files
- Restore settings

An automatic restart of the product is performed only after the settings have been restored.

16.7.1 Restore OEM-specific folders and files

Backed-up OEM-specific folders and files of the product can be loaded onto a device. This allows you to restore the configuration of a device while restoring the settings.

Further information: "Restore settings", Page 302

If servicing becomes necessary, an exchange unit can thus be operated with the configuration of the failed unit once the settings have been restored, provided that both units use the same or compatible firmware versions.

- Tap **Settings** in the main menu

- Tap **Service**
- Tap **OEM area**
- Open in succession:
  - **Back up and restore**
  - **Restore OEM specific folders and files**
- Tap **Load as ZIP**
- If required, connect a USB mass storage device (FAT32 format) to a USB port of the product
- Navigate to the folder containing the backup file
- Select the backup file
- Tap **Select**
- Confirm the successful transfer with **OK**

> There is no automatic restart when the OEM-specific folders and files are restored. A restart is performed when the settings are restored.
>
> **Further information:** "Restore settings", Page 302

- To restart the product with the transferred OEM-specific folders and files, switch the product off and then back on

Safely removing a USB mass storage device

- Tap **File management** in the main menu
- Navigate to the list of storage locations

- Tap **Safely remove**
- > The message **"The storage medium can be removed now."** appears
- Disconnect the USB mass storage device

16.7.2 Restore user files

Backed-up user files of the product can be loaded into the product again. Existing user files will be overwritten. This, together with the restoring of the settings, enables you to restore the complete configuration of a unit.

Further information: "Restore settings", Page 302

If servicing becomes necessary, a replacement unit can be operated with the configuration of the failed unit after restoring. This requires that the version of the old firmware matches that of the new firmware or that the versions are compatible.

> All files from all user groups that are stored in the respective folders are backed up and can be restored as user files.
>
> The files in the **System** folder are not restored.

- Tap **Settings** in the main menu
- Open in succession:
- Tap **Service**
- Open in succession:
  - **Back up and restore**
  - **Restore user files**
- Tap **Load as ZIP**
- If required, connect a USB mass storage device (FAT32 format) to a USB port of the product
- Navigate to the folder containing the backup file
- Select the backup file
- Tap **Select**
- Confirm the successful transfer with **OK**

> There is no automatic restart when the user files are restored. A restart is performed when the settings are restored.
>
> "Restore settings"

- To restart the product with the transferred user files, switch the product off and then back on

Safely removing a USB mass storage device

- Tap **File management** in the main menu
- Navigate to the list of storage locations
- Tap **Safely remove**
- > The message **"The storage medium can be removed now."** appears
- Disconnect the USB mass storage device

16.7.3 Restore settings

Backed-up settings can be restored to the product. The current configuration of the product is replaced in the process.

> Software options that were active when the settings were backed up must be activated before restoring the settings.

A restore can be necessary in the following cases:

- During commissioning, the settings are set on a product and transferred to all identical products
  Further information: "Steps for commissioning", Page 92
- After a reset, the settings are copied back to the product
  Further information: "Reset all settings", Page 303

- ▶ Tap **Settings** in the main menu
- ▶ Open in succession:
  - **Service**
  - **Back up and restore**
  - **Restore settings**
- ▶ Tap **Complete restoration**
- ▶ If required, connect a USB mass storage device (FAT32 format) to a USB port of the product
- ▶ Navigate to the folder containing the backup file
- ▶ Select the backup file
- ▶ Tap **Select**
- ▶ Confirm the successful transfer with **OK**
- > The system is shut down
- ▶ To restart the product with the transferred configuration data, switch the product off and then back on

Safely removing a USB mass storage device

- ▶ Tap **File management** in the main menu
- ▶ Navigate to the list of storage locations
- ▶ Tap **Safely remove**
- > The message **"The storage medium can be removed now."** appears
- ▶ Disconnect the USB mass storage device

16.8 Reset all settings

You can reset the settings of the product to the factory defaults if required. The software options are deactivated and must be subsequently reactivated with the available license key.

- Tap **Settings** in the main menu
- Tap **Service**
- Open in succession:
  - **Reset**
  - **Reset all settings**
- Enter password
- Confirm the entry with **RET**
- To show the password in plain text, activate **Show password**
- Tap **OK** to confirm the action
- Tap **OK** to confirm the reset
- Tap **OK** to confirm shutdown of the device
- > The product is shut down
- > All settings are reset
- > To restart the product, switch it off and then back on

16.9 Reset to shipping conditions

You can reset the settings of the product to the factory defaults and delete the user files from product's memory area. The software options are deactivated and must be subsequently reactivated with the available license key.

- Tap **Settings** in the main menu
- Tap **Service**
- Open in succession:
  - **Reset**
  - **Reset to shipping conditions**
- Enter password
- Confirm the entry with **RET**
- To show the password in plain text, activate **Show password**
- Tap **OK** to confirm the action
- Tap **OK** to confirm the reset
- Tap **OK** to confirm shutdown of the device
- > The product is shut down
- > All settings are reset and the user files are deleted
- > To restart the product, switch it off and then back on

17

What to do if ...

17.1 Overview

This chapter describes the causes of faults or malfunctions of the product and the appropriate corrective actions.

> Make sure that you have read and understood the "Basic operation" chapter before carrying out the actions described below.
>
> **Further information:** "Basic operation", Page 57

17.2 System or power failure

Operating system data can be corrupted in the following cases:

- System or power failure
- Switching off the product without shutting down the operating system

If the firmware is damaged, the product starts a Recovery System that displays short instructions on the screen.

With restoration, the Recovery System overwrites the damaged firmware with a new firmware previously saved to a USB mass storage device. During this procedure the settings of the product are deleted.

17.2.1 Restoring the firmware

- ▶ On a computer, create the folder "heidenhain" on a USB mass storage device (FAT32 format).
- ▶ In the "heidenhain" folder, create the folder "update"
- ▶ Copy the new firmware to the "update" folder
- ▶ Rename the firmware "recovery.dro"
- ▶ Switch off the product
- ▶ Connect a USB mass storage device to a USB port of the product
- ▶ Switch on the product
- > The product starts the Recovery System
- > The USB mass storage device is detected automatically
- > The firmware is installed automatically
- > After a successful update, the firmware is automatically renamed "recovery.dro.[yyyy.mm.dd.hh.mm]"
- ▶ Restart the product on completion of the installation
- > The product starts up with the factory defaults

17.2.2 Restore settings

Reinstalling the firmware resets the product to the factory defaults. This deletes the setting, including the error compensation values and the activated software options.

To restore settings, you must either reconfigure them on the unit yourself or restore previously backed up settings on the unit.

> Software options that were active when the settings were backed up must be activated before restoring the settings on the product.

- Activating software options

Further information: "Activating the Software options", Page 94

- Restoring settings

Further information: "Restore settings", Page 302

17.3 Malfunctions

If faults or malfunctions that are not listed in the "Troubleshooting" table below occur during operation, refer to the machine tool builder's documentation or contact a HEIDENHAIN service agency.

17.3.1 Troubleshooting

> The following troubleshooting steps must be performed only by the personnel indicated in the table.
>
> **Further information:** "Personnel qualification", Page 29

Fault	Cause of fault	Correction of fault	Personnel
The status LED remains dark after switch-on	There is no supply voltage	▶ Check the power cable	Electrical specialist
	The product does not function properly	▶ Contact a HEIDENHAIN service agency	Qualified personnel
A blue screen appears when the unit starts up	Firmware error during startup	▶ If this fault occurs for the first time, switch the product off and then on again ▶ If the fault recurs, contact a HEIDENHAIN service agency	Qualified personnel
After startup, the product does not recognize any entries made on the touchscreen	Incorrect hardware initialization	▶ Switch the product off and then on again	Qualified personnel
Axes do not count despite movement of the encoder	Incorrect connection of the encoder	▶ Correct the connection ▶ Contact the encoder manufacturer's service agency	Qualified personnel
Axes are miscounting	Incorrect settings of the encoder	▶ Check the encoder settings Page 102	Qualified personnel

Fault	Cause of fault	Correction of fault	Personnel
Axes cannot be moved	Incorrect axis settings	▶ Check the axis settings	Qualified personnel
	Feed-rate override is at zero	▶ Check position of the feed rate override potentiometer	Qualified personnel
Positioning error	Incorrect axis settings	▶ Check the axis settings	Qualified personnel
Standstill error	Incorrect axis settings	▶ Check the axis settings	Qualified personnel
Axis cannot be move with the jog buttons	Incorrect axis settings	▶ Check the axis settings	Qualified personnel
	Incorrect operating mode (MDI mode, programming)	▶ Check the operating mode	Qualified personnel
	Feed rate override is at zero	▶ Check position of the feed rate override potentiometer	Qualified personnel
Feed rate override does not limit the axis speed	Incorrect feed rate override settings	▶ Check the axis settings	Qualified personnel
Rapid traverse key does not work	Incorrect rapid traverse settings	▶ Check settings Page 249	Qualified personnel
External axis error	External peripherals	▶ Conduct a systematic error search	Qualified personnel, possibly OEM
Spindle error	Incorrect settings of the spindle axis	▶ Check the settings of the spindle axes Page 270	Qualified personnel, possibly OEM
	External peripherals	▶ Perform systematic error search	Qualified personnel, possibly OEM
Spindle stop	External peripherals	▶ Conduct a systematic error search	Qualified personnel, possibly OEM
Cycles cannot be started with Cycle Start	Incorrect setting of **Automatic feed**	▶ Check settings Page 249	Qualified personnel
Cycle start key lighting does not work	Incorrect setting of **Autostart light**	▶ Check settings Page 250	Qualified personnel
Reversal during thread cutting does not work	Incorrect setting of **Spindle sleeve final position +/-**	▶ Check settings	Qualified personnel
Automatic traversing to the limit switch does not work	Incorrect setting of **Software limit switches** or **Automatic feed**	▶ Check settings Page 269 Page 249	Qualified personnel
Outside of software limit switches	Incorrect setting of **Software limit switches**	▶ Check settings Page 269	Qualified personnel
Emergency stop	External peripherals	▶ Conduct a systematic error search	Qualified personnel, possibly OEM

Fault	Cause of fault	Correction of fault	Personnel
Control voltage is missing	External peripherals	▶ Conduct a systematic error search	Qualified personnel, possibly OEM
Connection to the network is not possible	Defective connection	▶ Check the cable and the correct connection to X116	Qualified personnel
	Incorrect settings of the network	▶ Check the network settings Page 140	Qualified personnel
The connected USB mass storage device is not detected	Defective USB connection	▶ Check the correct position of the USB mass storage device in the port ▶ Use another USB port	Qualified personnel
	The type or formatting of the USB mass storage device is not supported	▶ Use another USB mass storage device ▶ Format USB mass storage device with FAT32	Qualified personnel
The unit starts in recovery mode (text only mode)	Firmware error during startup	▶ If this fault occurs for the first time, switch the product off and then on again ▶ If the fault recurs, contact a HEIDENHAIN service agency	Qualified personnel
User login is not possible	Password does not exist	▶ As user with higher permission level, reset the password Page 136 ▶ To reset the OEM password, contact the HEIDENHAIN service agency	Qualified personnel

18

Removal and disposal

18.1 Overview

This chapter contains information and environmental protection specifications that must be observed for correct disassembly and disposal of the device.

18.2 Removal

> Removal of the product must be performed only by qualified personnel.
> **Further information:** "Personnel qualification", Page 29

Depending on the connected peripherals, the removal may need to be performed by an electrical specialist.

In addition, the same safety precautions that apply to the mounting and installation of the respective components must be taken.

Removing the product

To remove the product, follow the installation and mounting steps in the reverse order.

Further information: "Installation", Page 45

Further information: "Mounting", Page 39

18.3 Disposal

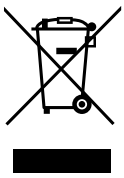

NOTICE

Incorrect disposal of the product!

Incorrect disposal of the product can cause environmental damage.

- Do not dispose of electrical waste and electronic components in domestic waste
- The integrated backup battery must be disposed of separately from the product
- Forward the product and the backup battery to recycling in accordance with the applicable local disposal regulations

- If you have any questions about the disposal of the product, please contact a HEIDENHAIN service agency

19

Specifications

19.1 Overview

This chapter contains an overview of the product data and drawings with the product dimensions and mating dimensions.

19.2 Product data

Device	
Housing	Aluminum milled housing
Housing dimensions	314 mm x 265 mm x 36 mm
Fastener system, mating dimensions	VESA MIS-D, 100 100 mm x 100 mm

Display	
Visual display unit	■ LCD widescreen (16:10) color screen 30.7 cm (12.1") ■ 1280 x 800 pixels
Display step	Selectable, min. 0.00001 mm
User interface	User interface (GUI) with touchscreen

Electrical data	
Supply voltage	■ AC 100 V ... 240 V (±10 %) ■ 50 Hz ... 60 Hz (±5 %) ■ For devices with ID 1089176-xx: Max. input power 38 W ■ For devices with ID 1089177-xx: Max. input power 79 W
Buffer battery	Lithium battery type CR2032; 3.0 V
Overvoltage category	II
Number of encoder inputs	Milling application mode: 4 (2 additional inputs can be enabled via software option) Turning application mode: 4
Encoder interfaces	■ 1 V_{PP}: maximum current 300 mA, max. input frequency 400 kHz ■ 11 μA_{PP}: maximum current 300 mA, max. input frequency 150 kHz ■ EnDat 2.2: maximum current 300 mA
Interpolation at 1 V_{PP}	4096-fold
Touch probe connection	■ Voltage supply DC 5 V or DC 12 V ■ 5 V or floating switching output ■ Max. cable length with HEIDENHAIN cable 30 m

Electrical data			
Digital inputs	TTL DC 0 V ... +5 V		
	Level	Voltage range	Current range
	High	DC 11 V ... 30 V	2.1 mA ... 6.0 mA
	Low	DC 3 V ... 2.2 V	0.43 mA
Digital outputs	TTL DC 0 V ... +5 V Maximum load 1 kΩ Voltage range DC 24 V (20.4 V ... 28.8 V) Output current max. 150 mA per channel		
Relay outputs	For devices with ID 1089177-xx: ■ Max. switching voltage AC 30 V / DC 30 V ■ Max. switching current 0.5 A ■ Max. switching capacity 15 W ■ Max. continuous current 0.5 A		
Analog inputs	For devices with ID 1089177-xx: Voltage range DC 0 V ... +5 V Resistance 100 Ω ≤ R ≤ 50 kΩ		
Analog outputs	For devices with ID 1089177-xx: Voltage range DC –10 V ... +10 V Maximum load 1 kΩ		
5 V voltage outputs	Voltage tolerance ±5 %, maximum current 100 mA		
Data interface	■ 4 USB 2.0 Hi-Speed (Type A), maximum current 500 mA per USB connection ■ 1 Ethernet 10/100 Mbit/1 Gbit (RJ45)		

Environment	
Operating temperature	0 °C to +45 °C
Storage temperature	–20 °C to +70 °C
Relative air humidity	10 % to 80 % RH, non-condensing
Altitude	≤ 2000 m

General information	
Directives	■ EMC Directive 2014/30/EU ■ Low Voltage Directive 2014/35/EU ■ RoHS Directive 2011/65/EU
Pollution degree	2
Protection EN 60529	■ Front panel and side panels: IP 65 ■ Rear panel: IP 40
Mass	■ 3.5 kg ■ With Single-Pos stand: 3.6 kg ■ With Duo-Pos stand: 3.8 kg ■ With Multi-Pos stand: 4.5 kg ■ With Multi-Pos holder: 4.1 kg

19.3 Product dimensions and mating dimensions

All dimensions in the drawings are in millimeters.

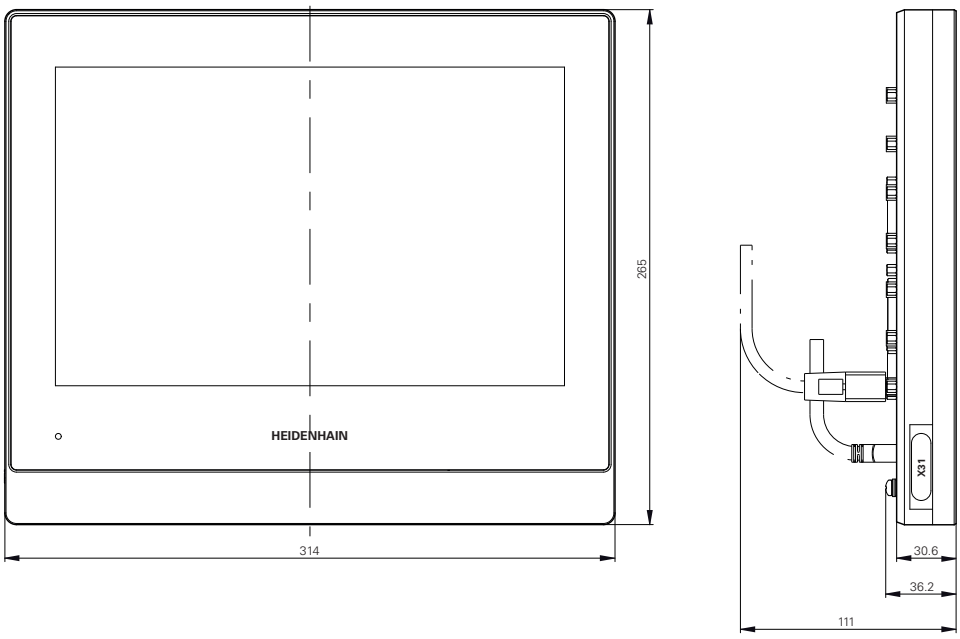

Figure 64: Dimensions of housing

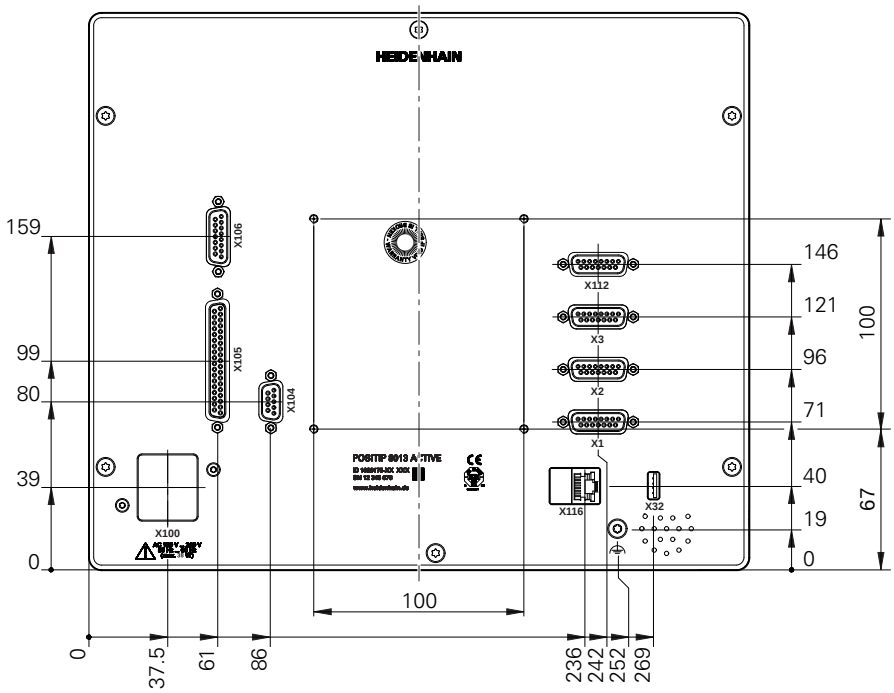

Figure 65: Dimensions of rear panel of the product

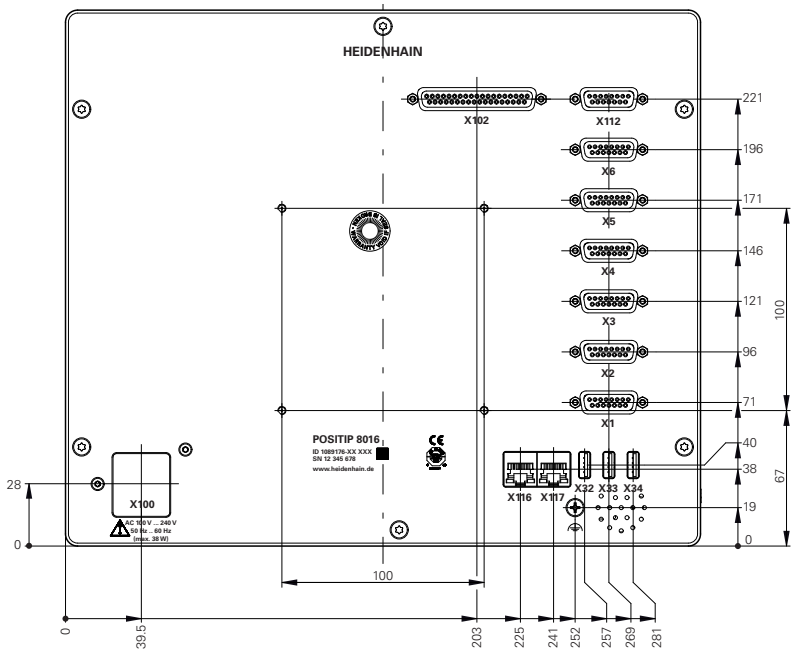

Figure 66: Dimensions of the rear panel for devices with ID 1089176-xx

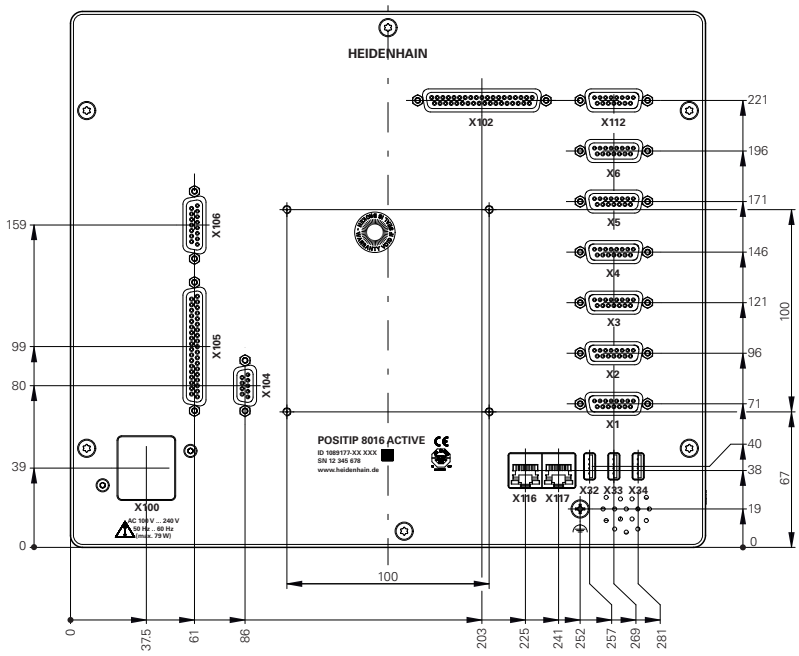

Figure 67: Dimensions of the rear panel for devices with ID 1089177-xx

19.3.1 Product dimensions with Single-Pos stand

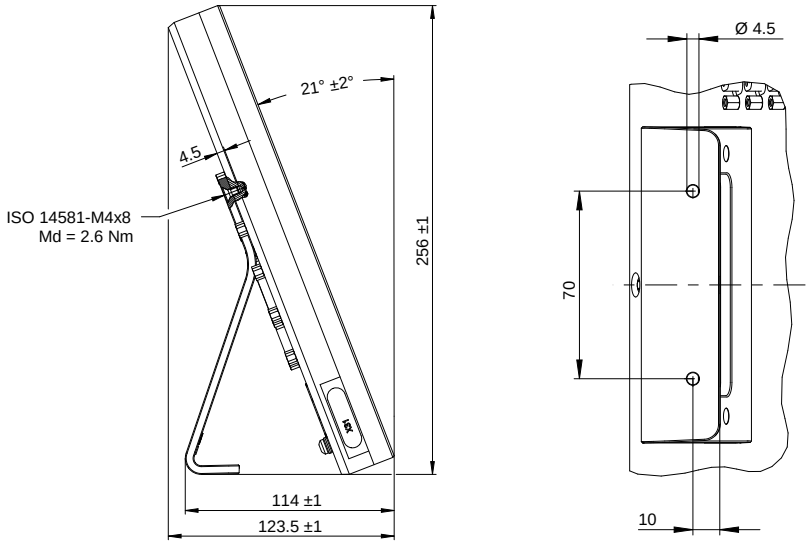

Figure 68: Product dimensions with Single-Pos stand

19.3.2 Product dimensions with Duo-Pos stand

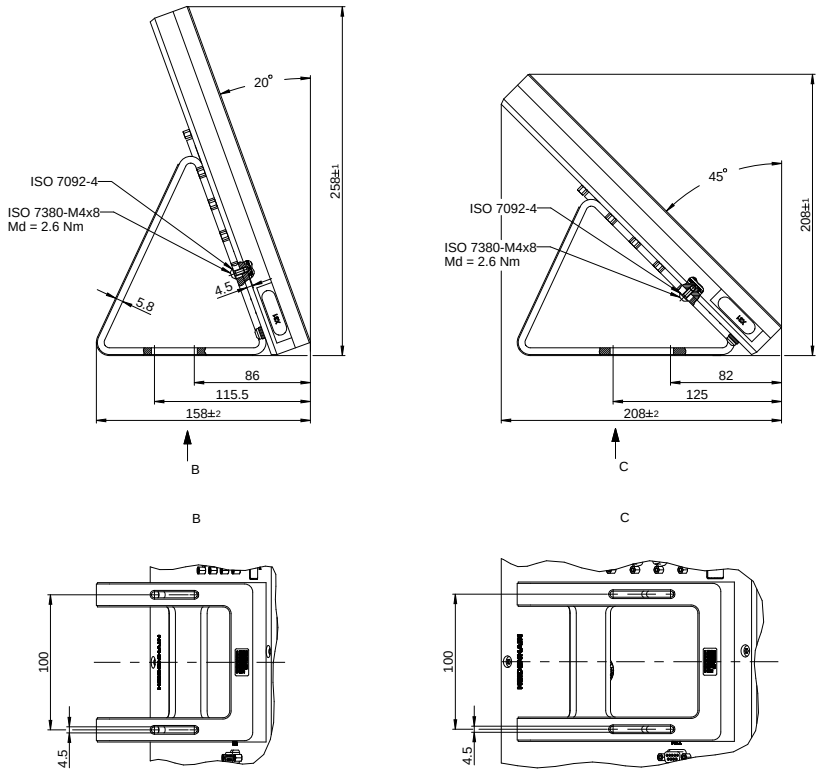

Figure 69: Product dimensions with Duo-Pos stand

19.3.3 Product dimensions with Multi-Pos stand

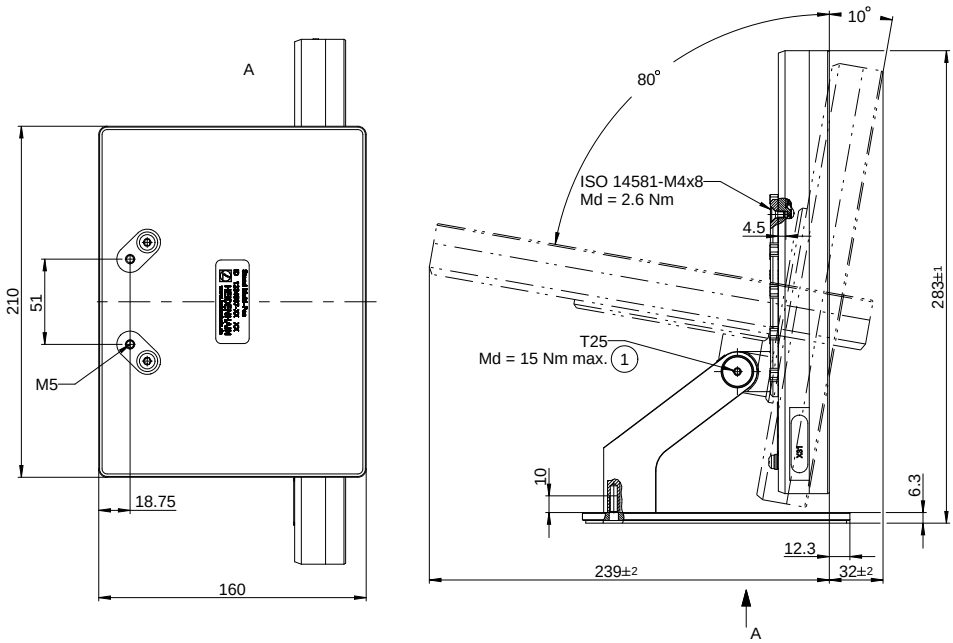

Figure 70: Product dimensions with Multi-Pos stand

19.3.4 Product dimensions with Multi-Pos holder

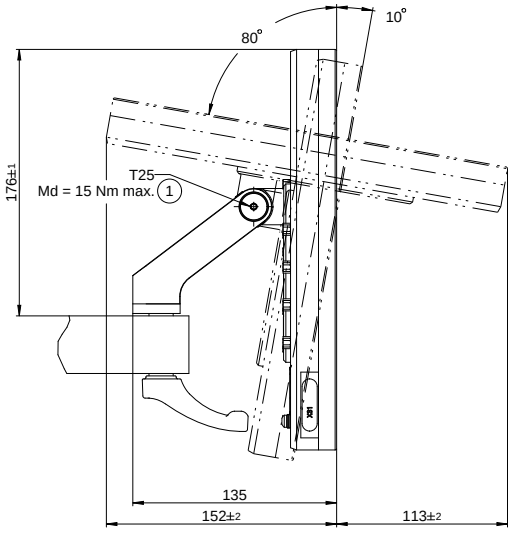

Figure 71: Product dimensions with Multi-Pos holder

20 Index

T

U

W

21 List of figures

HEIDENHAIN

DR. JOHANNES HEIDENHAIN GmbH
Dr.-Johannes-Heidenhain-Straße 5
83301 Traunreut, Germany
☏ +49 8669 31-0
FAX +49 8669 32-5061
E-mail: info@heidenhain.de

Technical support FAX +49 8669 32-1000
Measuring systems ☏ +49 8669 31-3104
E-mail: service.ms-support@heidenhain.de
NC support ☏ +49 8669 31-3101
E-mail: service.nc-support@heidenhain.de
NC programming ☏ +49 8669 31-3103
E-mail: service.nc-pgm@heidenhain.de
PLC programming ☏ +49 8669 31-3102
E-mail: service.plc@heidenhain.de
APP programming ☏ +49 8669 31-3106
E-mail: service.app@heidenhain.de

www.heidenhain.de

Original document
1317302 · 01 · A · 02 · 07/2021 · PDF